Mercedes-Benz

Controller Area Network CAN

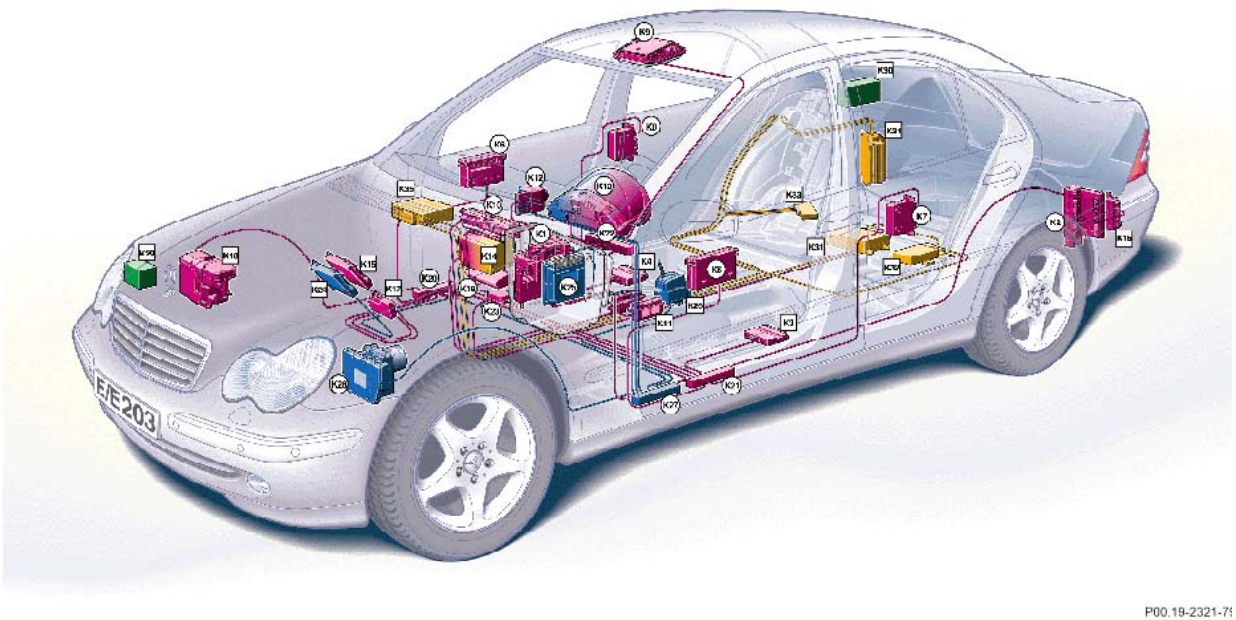

These technical training materials are current as of the date noted on the materials, and may be revised or updated without notice. Always check for revised or updated information.

To help avoid personal injury to you or others, and to avoid damage to the vehicle on which you are working, you must always refer to the latest Mercedes-Benz Technical Publication and follow all pertinent instructions when testing, diagnosing or making repair. Illustrations and descriptions in this training reference are based on preliminary information and may not correspond to the final US version vehicles. Refer to the official introduction manual and WIS when available.
Copyright Mercedes-Benz USA, LLC, 2002

Reproduction by any means or by any information storage and retrieval system or translation in whole or part is not permitted without written authorization from Mercedes-Benz USA, LLC or it's successors.
Published by Mercedes-Benz USA, LLC
Printed in U. S.A.

Objectives

- Explain advantages of CAN networks
- Explain how CAN networks operate
- Describe location of CAN connectors
- Explain CAN diagnosis techniques
- Provide reference information on other models
  (reference section at back of handout)

What is a CAN System?

A CAN system is:

- A digital communication link between multiple Electronic Control Modules (ECM)
- A 2 wire, bi-directional communication link with data transmitted according to priority
- Message specific addressing

Advantages

- Cost
- Improved immunity to electrical interference
- Fewer connectors
- Fewer pins on control modules
- Weight savings
- Fewer sensors
- Improved diagnosis facilities
- Rapid transmission rates

Types of CAN Communication

Mercedes-Benz uses several CAN networks. Depending on model and year the following may be used.

CAN C - Engine CAN *(also known as chassis CAN)*
Fast communication speeds 125 kbps or 500 kbps

CAN B - Interior CAN *(also known as body CAN)*
Communication speed 83 kbps

Information from CAN C can be sent to control modules on the CAN B or vice versa via the Electronic Ignition Switch (EIS). The EIS is the only control module* that can transfer the messages and is known as the gateway.

Without CAN

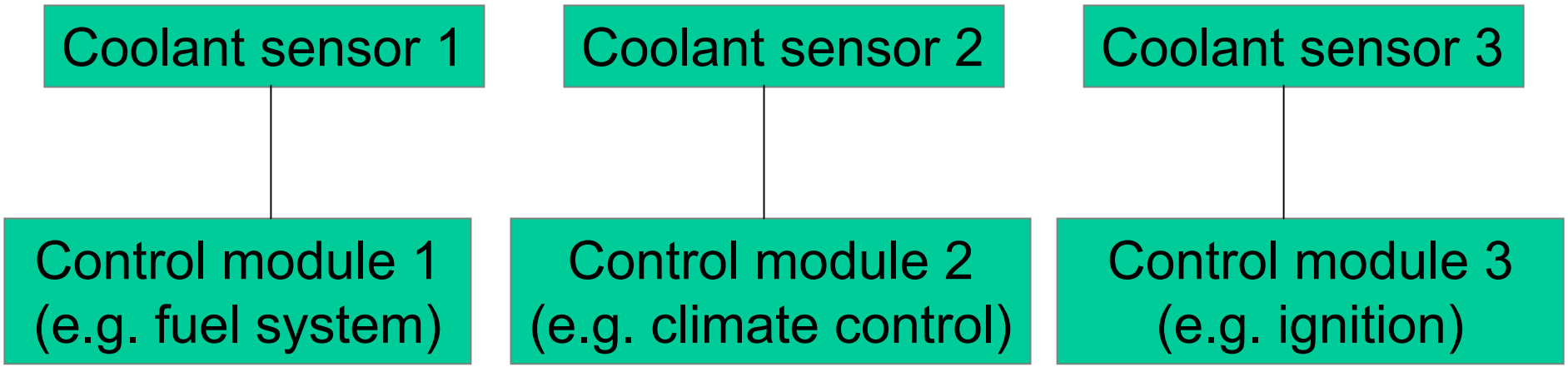
Coolant sensor 1
Coolant sensor 2
Coolant sensor 3
Control module 1
(e.g. fuel system)
Control module 2
(e.g. climate control)
Control module 3
(e.g. ignition)

CAN Bus

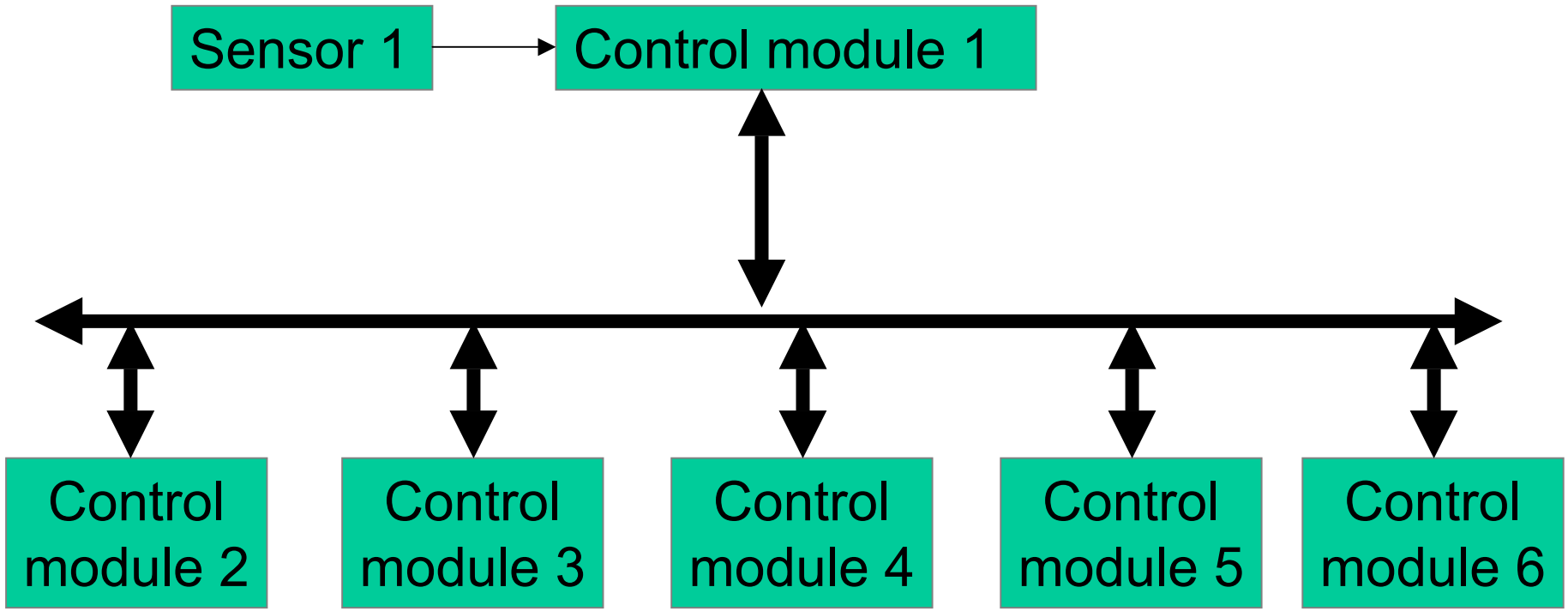
Sensor 1
Control module 1
Control module 2
Control module 3
Control module 4
Control module 5
Control module 6

CAN B Example

Controlling R.R. window from L.F. door

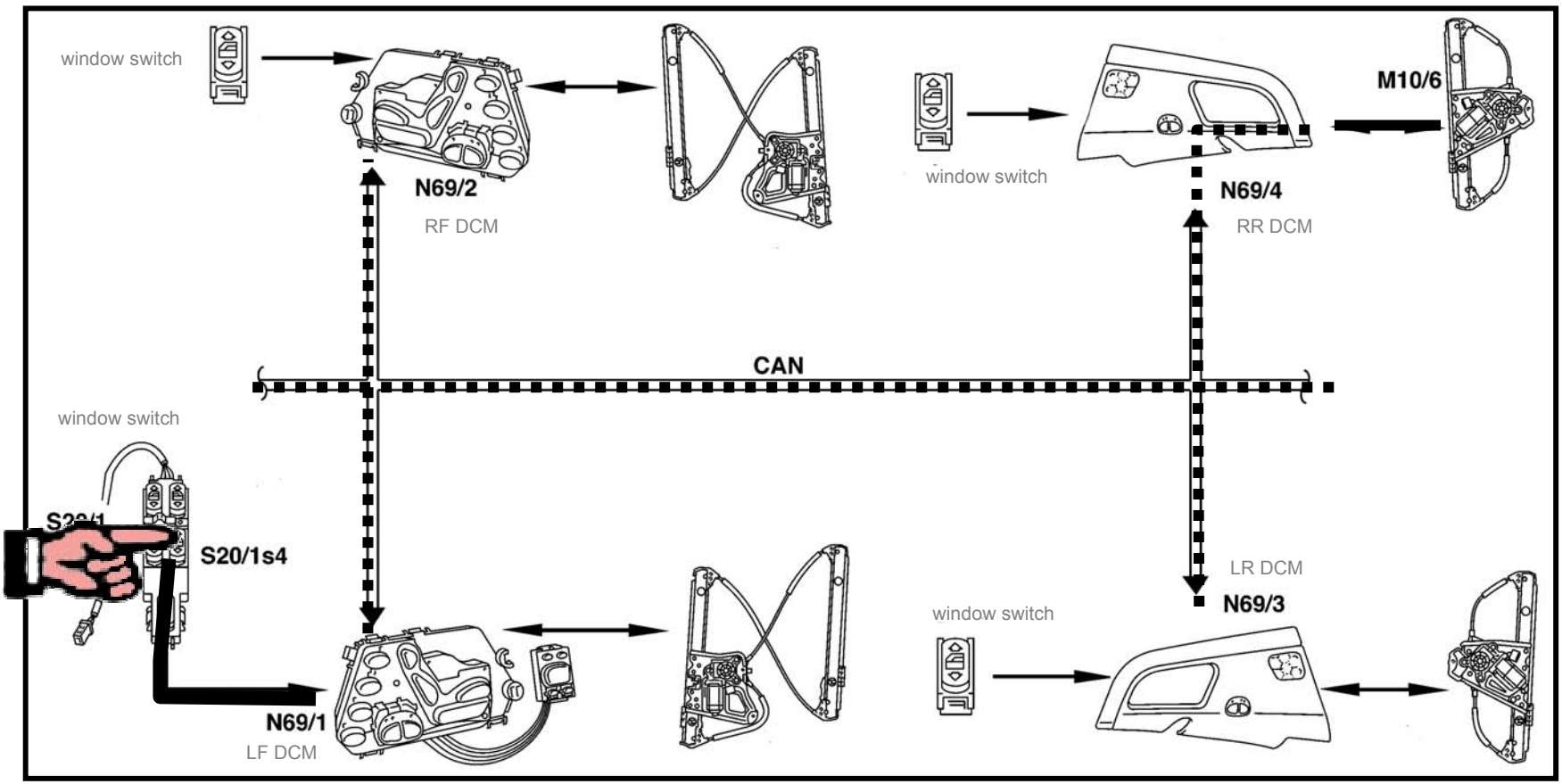

CAN High & Low

The CAN wiring consist of 2 wires called CAN High (CAN H) and CAN Low (CAN L).

All the control modules are connected in a parallel circuit using either Z splices or plug connector blocks (X30/_).

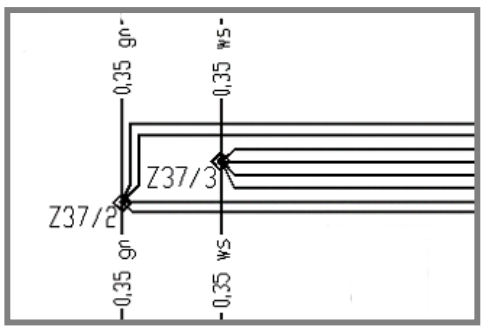

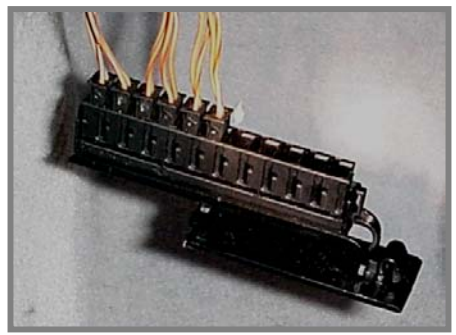

For the remainder of this presentation and shop modules, we will concentrate on the CAN B network as used in W203 / W220).

CAN H

- CAN-H has a voltage of approx. 0.025 volts when dormant
- Rises to base voltage of 0.65 volts when communicating
- Data seen as voltage levels going “high”

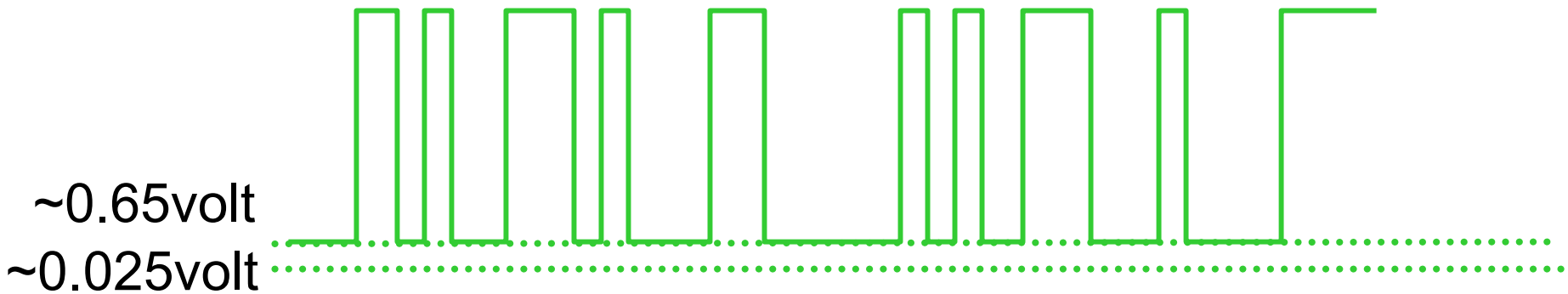

CAN L

- CAN-L has a voltage of 11.0 volts dormant
- Base voltage drops to 4.65 volts when active
- Data seen as voltage level going “low”

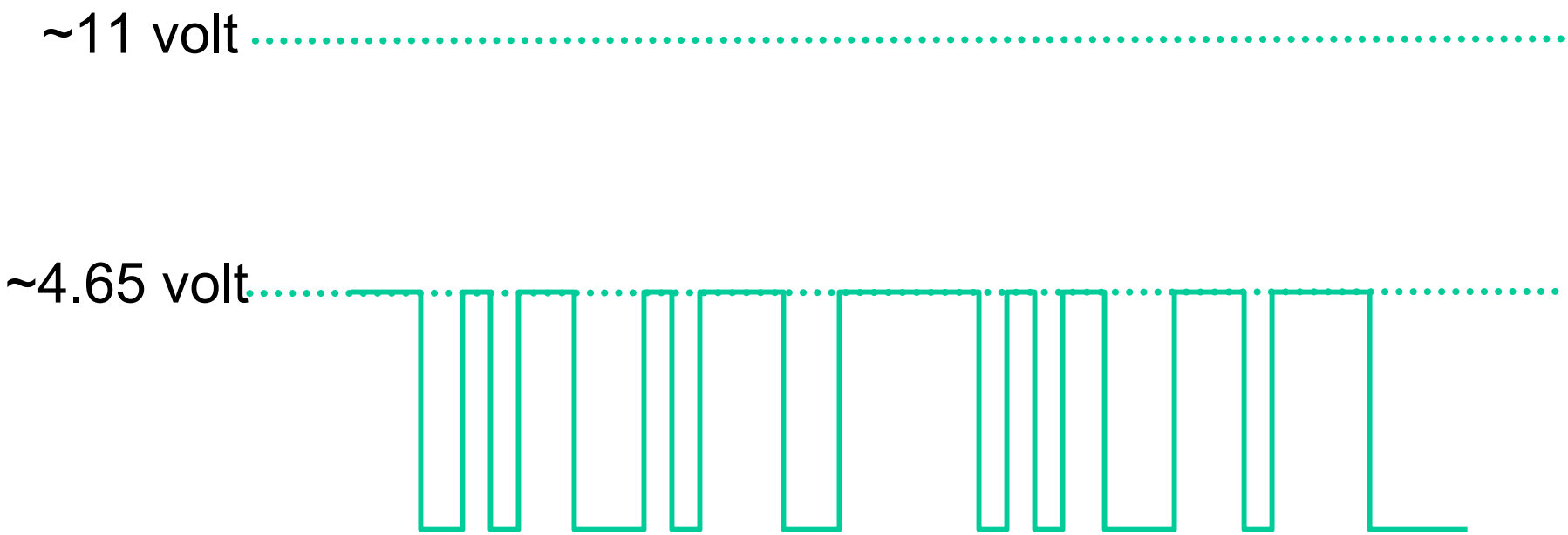

CAN B High & Low

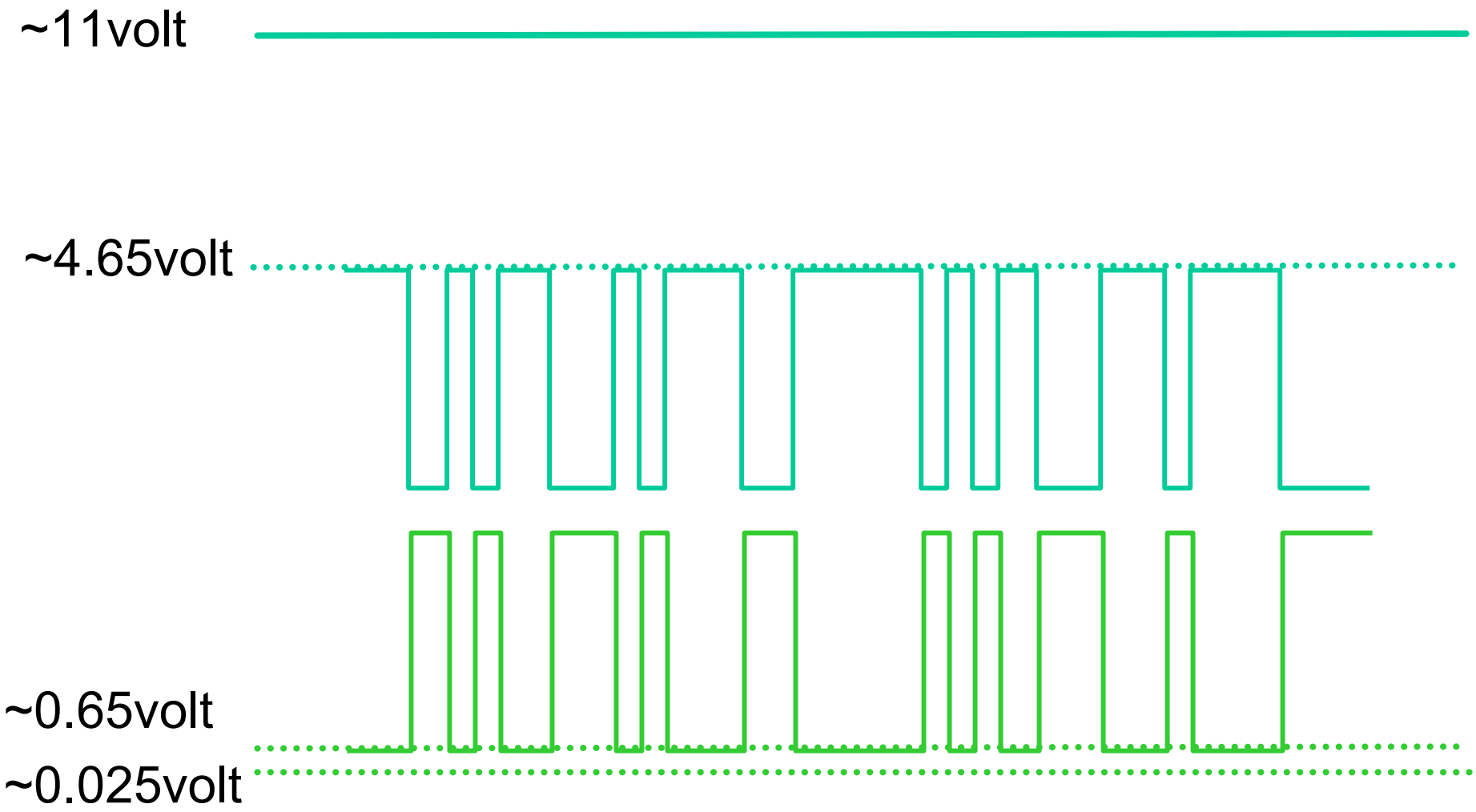

Safety Concept

CAN L still communicates (single line operation)

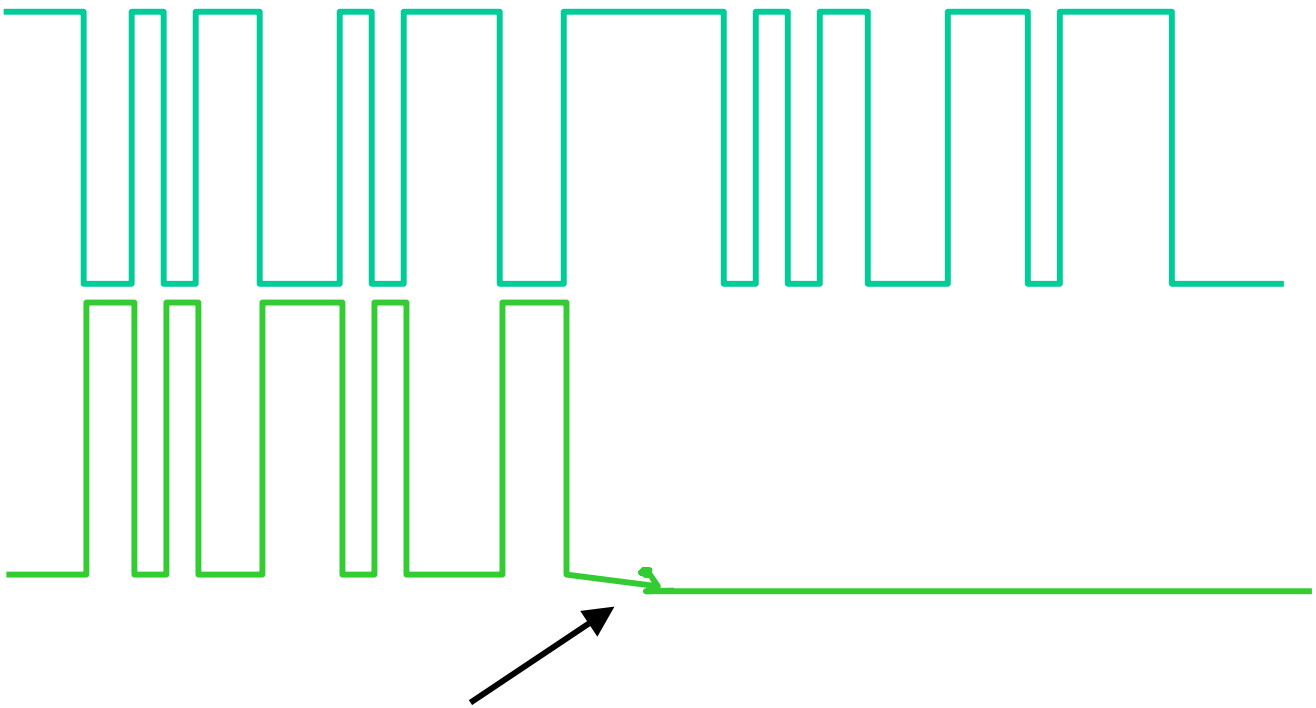

CAN H shorted to ground, cannot communicate

Wake-up Signal

Door switch

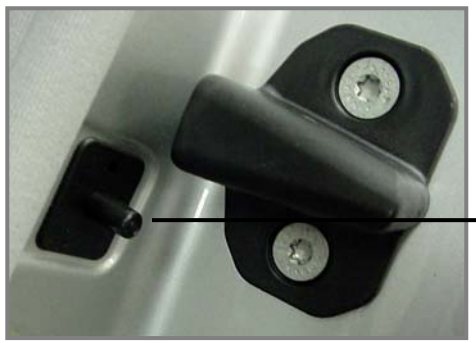

Rear SAM

EIS

WAKE UP !! / Door open

N70 (Overhead Control Panel)

- EIS is the master of the CAN
- EIS wakes up the control modules on the CAN

Tools For Diagnosing CAN B

- Ohm meter
- Volt meter
- Oscilloscope
- CAN B test harness
- SDS
- WIS

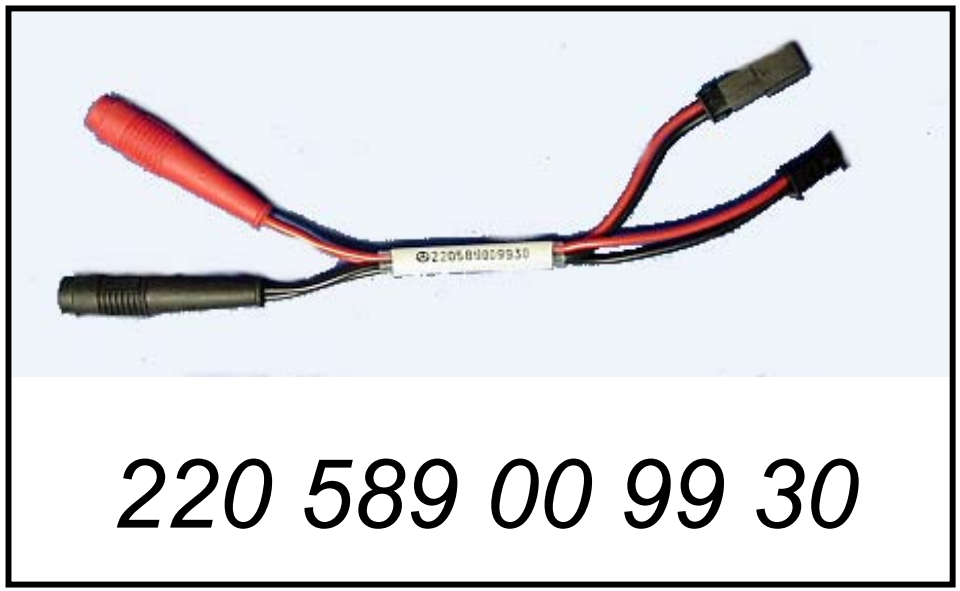

220 589 00 99 30

Note: The red lead is not always the CAN H

W203 CAN B (MY 2001)

via N10/1

Note: Always refer to the wiring diagram for your model and year.

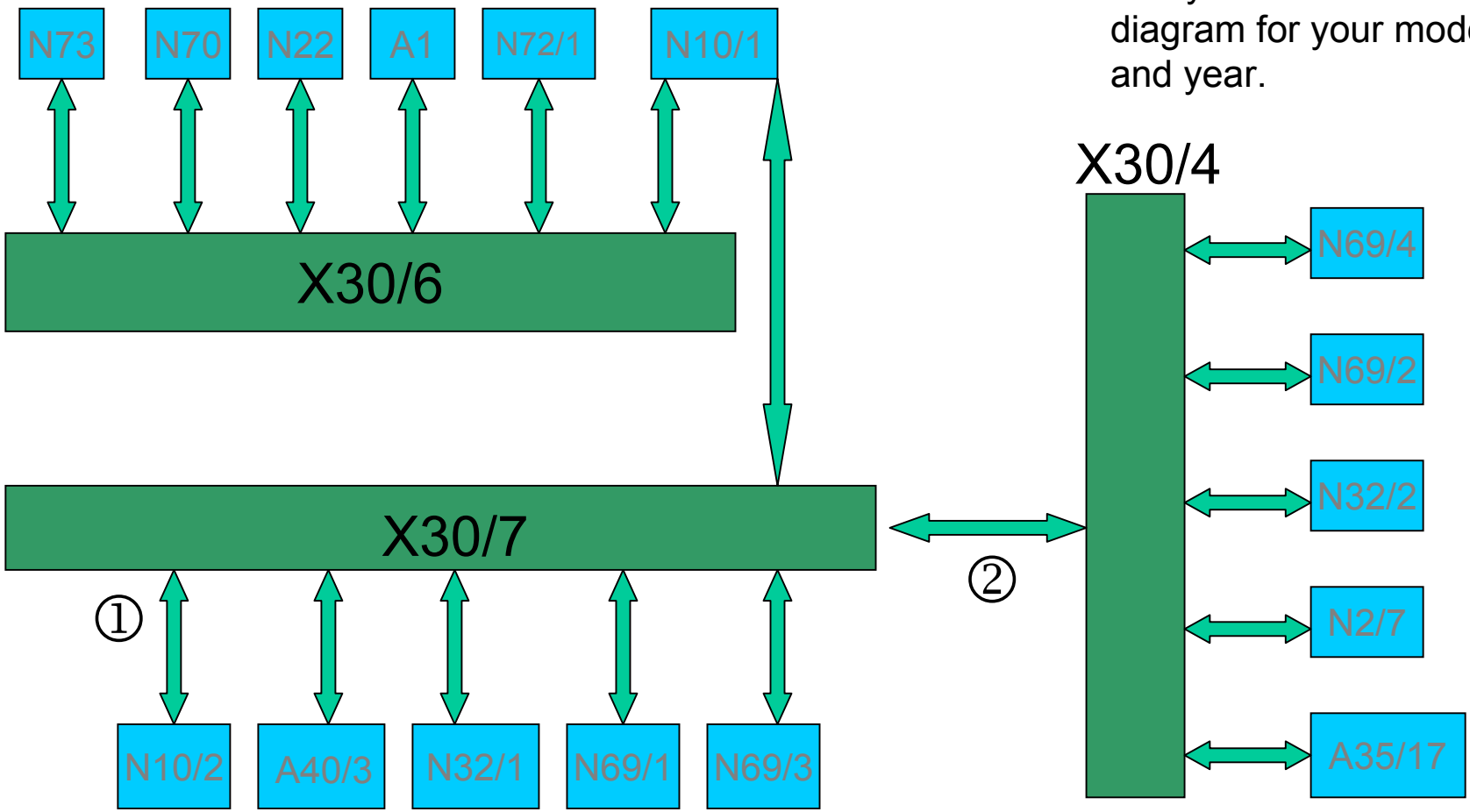

① **early**	**late**
GN/WT	RD
GN	BN

②
BN/BK
BN

CAN H wires are BN/RD
CAN L wires are BN
except where indicated

W203 CAN B Connector X30/6

- N73 - EIS
- N72/1 - UCP
- A1 - ICM
- N22 - AAC
- N70 - OCP
- N10/1 - Front SAM

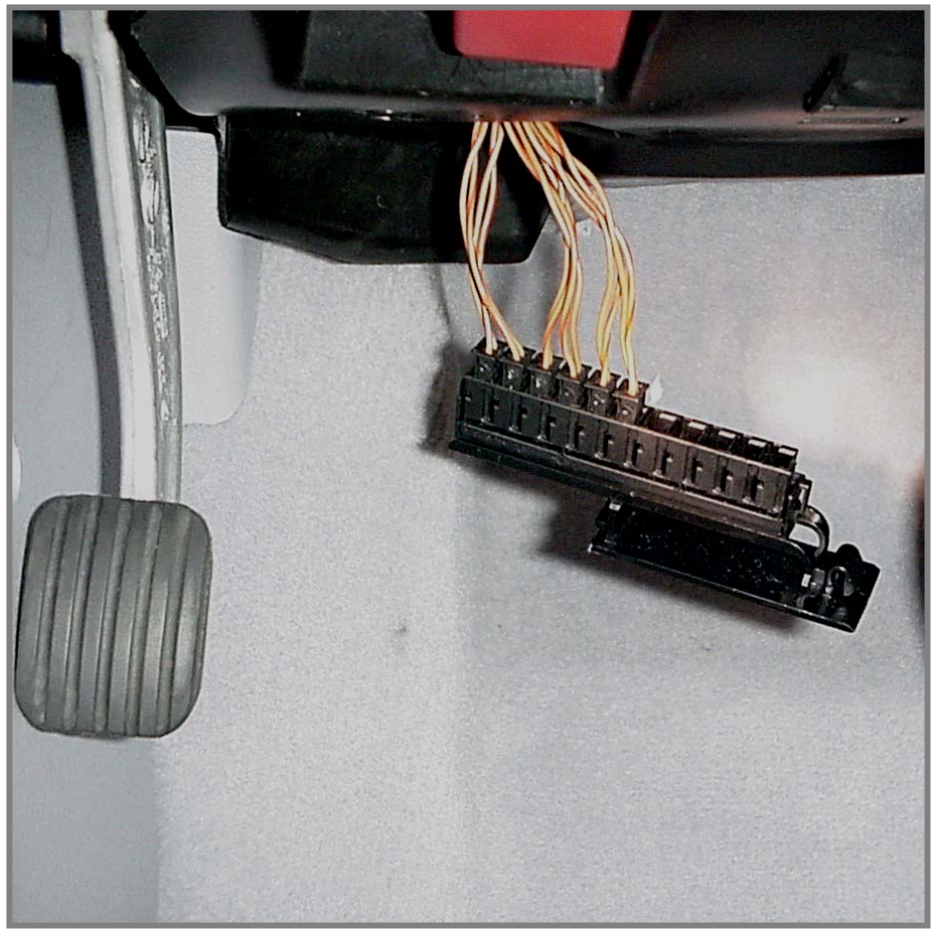

W203 CAN B Connector X30/7

- N10/1 - Front SAM
- A40/3 - COMAND
- A2 - Radio
- N69/1 - DCM-FL
- N69/3 - DCM-RL
- N10/2 - Rear SAM
- N32/1 - ESA-FL

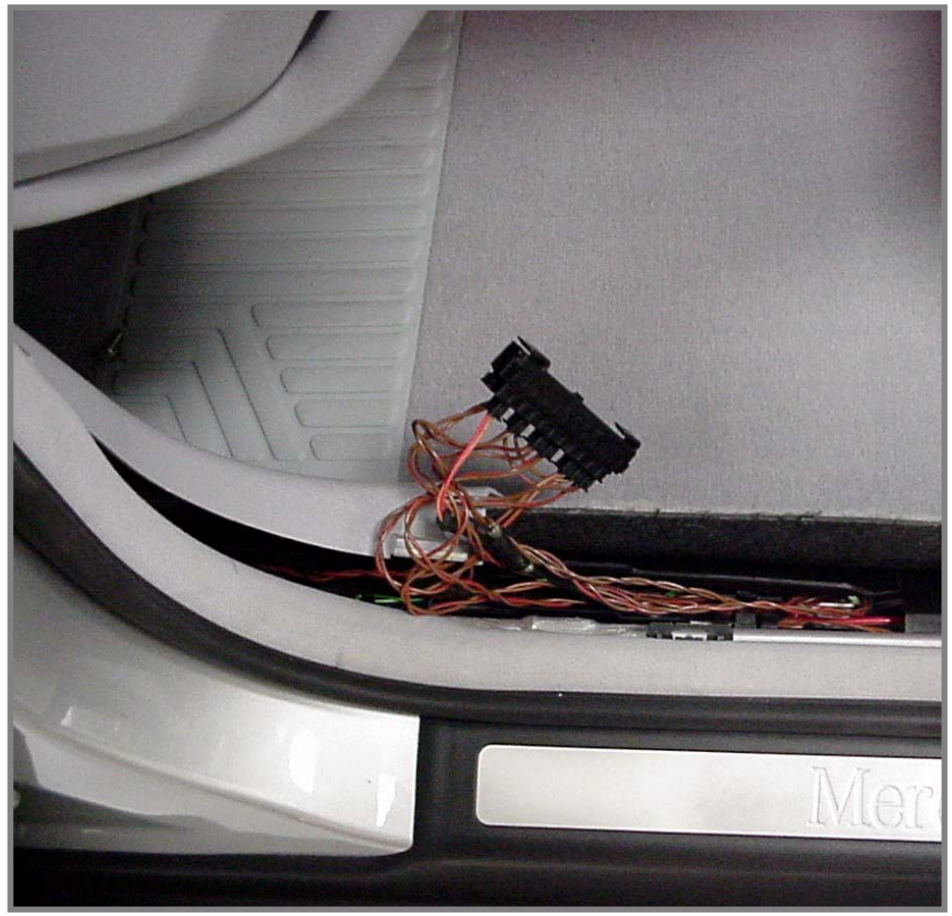

W203 CAN B Connector X30/4

- N69/2 - DCM-FR
- N69/4 - DCM-RR
- N2/7 - SRS
- A35/17 - TELE AID
- N32/2 - ESA-FR

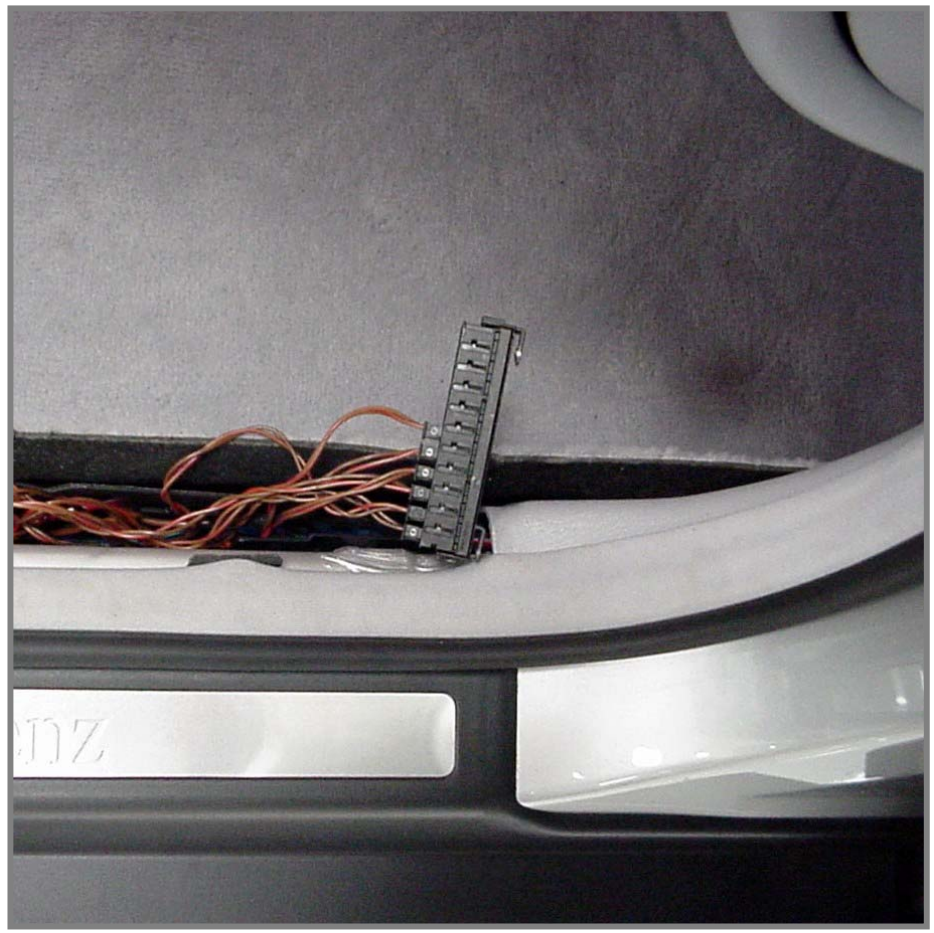

CAN B Malfunctions

- Shorted CAN B
- Constantly active CAN B
- Incorrect version coding

Shorted CAN B

When both the High and Low CAN B are shorted to ground or positive no communication is possible between control units.

This can happen if:

a. Control unit shorted

b. Wiring harness shorted

How could we determine if the CAN B is shorted?

a. Monitor CAN B voltage out of EIS

b. Monitor CAN B oscilloscope pattern out of EIS

c. Monitor the DAS (SDS)

Constantly Active CAN B

CAN B needs to go into a dormant state when the ignition switch is in the 0 position. EIS is the control unit in charge of activation and deactivation of the CAN B.

If a control unit in the CAN B keeps sending a signal the EIS will not request the CAN B to go into a dormant state.

How can we determine if the CAN B has not gone into a dormant state?

a. Monitor CAN B activity with an oscilloscope

b. Monitor CAN B voltage

Diagnostic Exercise For CAN B

The following diagnostic exercise involves a W203 with a shorted control unit.

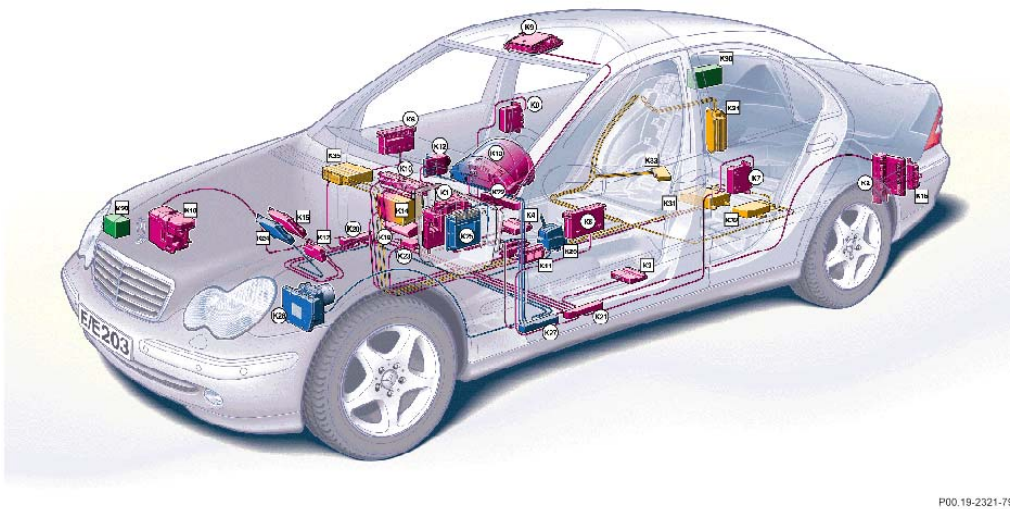

W203 CAN B

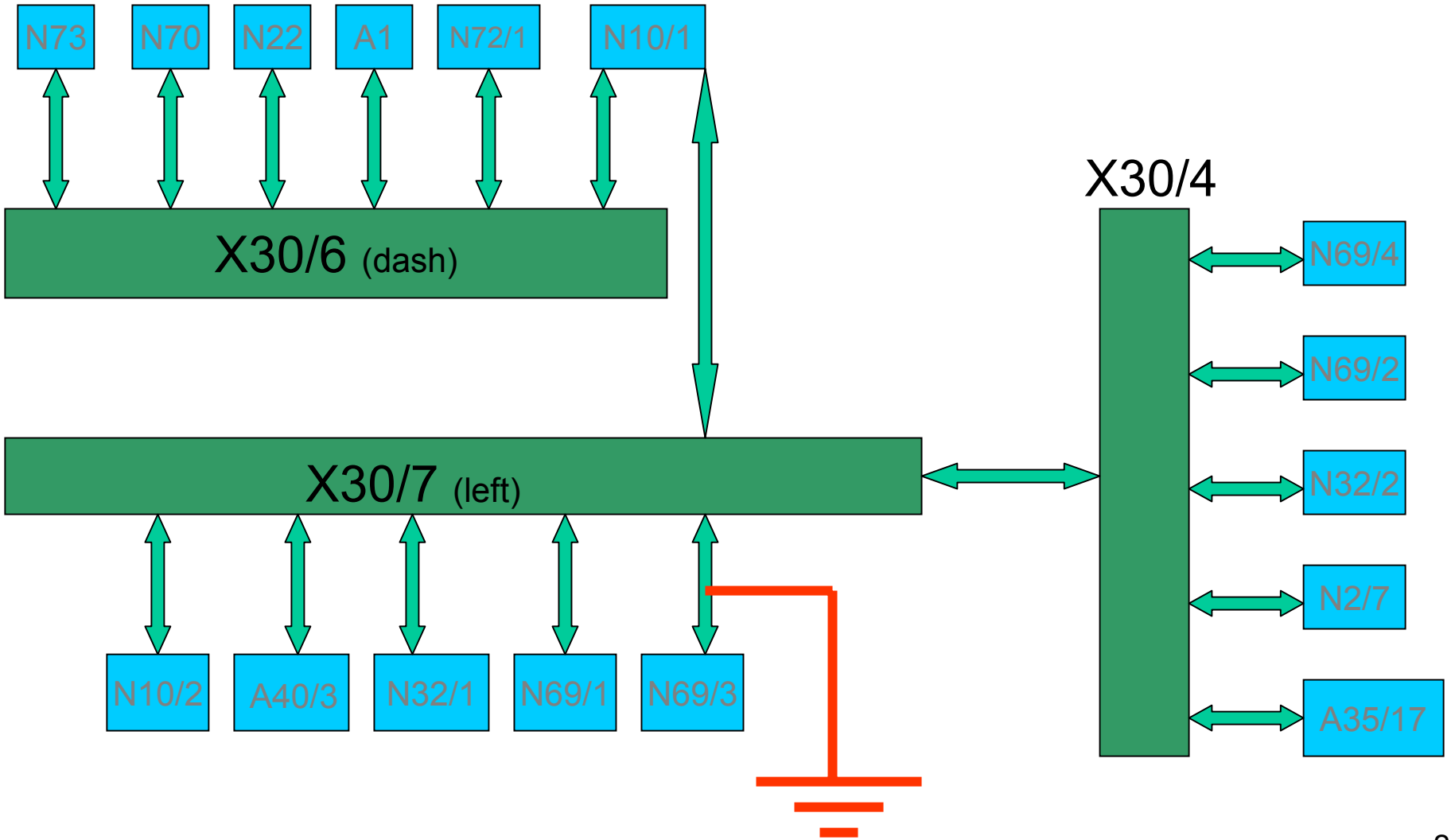
N73
N70
N22
A1
N72/1
N10/1
X30/6 (dash)
X30/4
X30/7 (left)
N69/4
N69/2
N32/2
N2/7
A35/17
N10/2
A40/3
N32/1
N69/1
N69/3

Diagnostic Exercise For CAN B

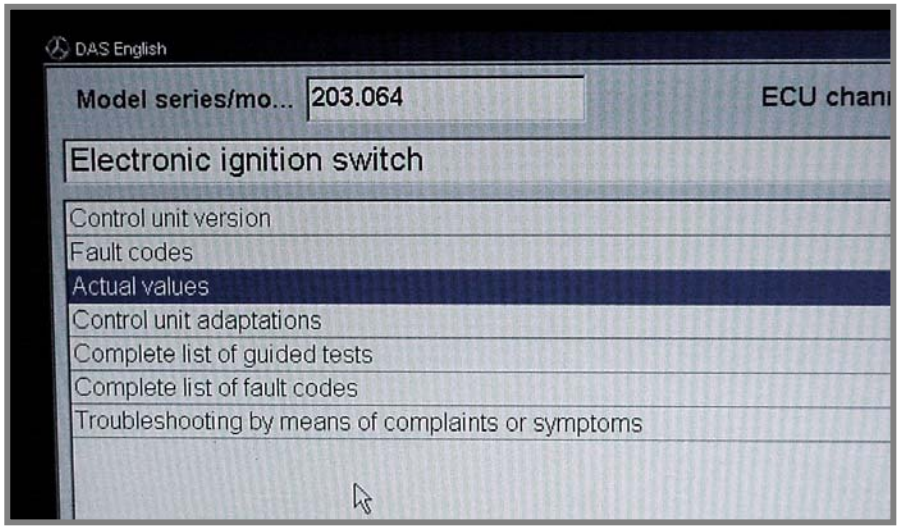

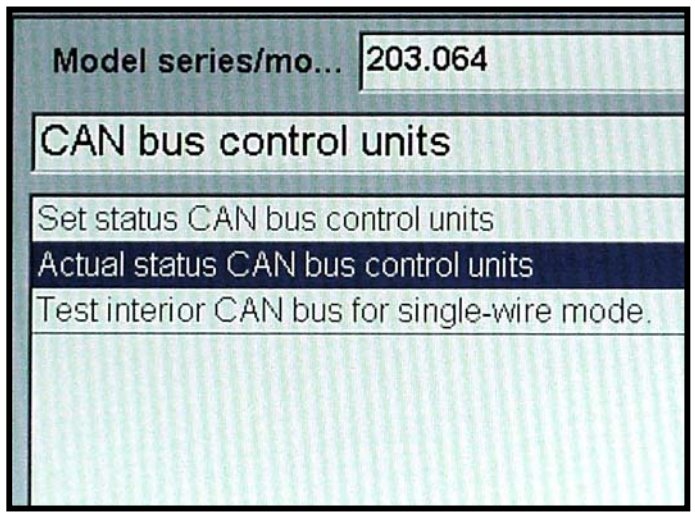

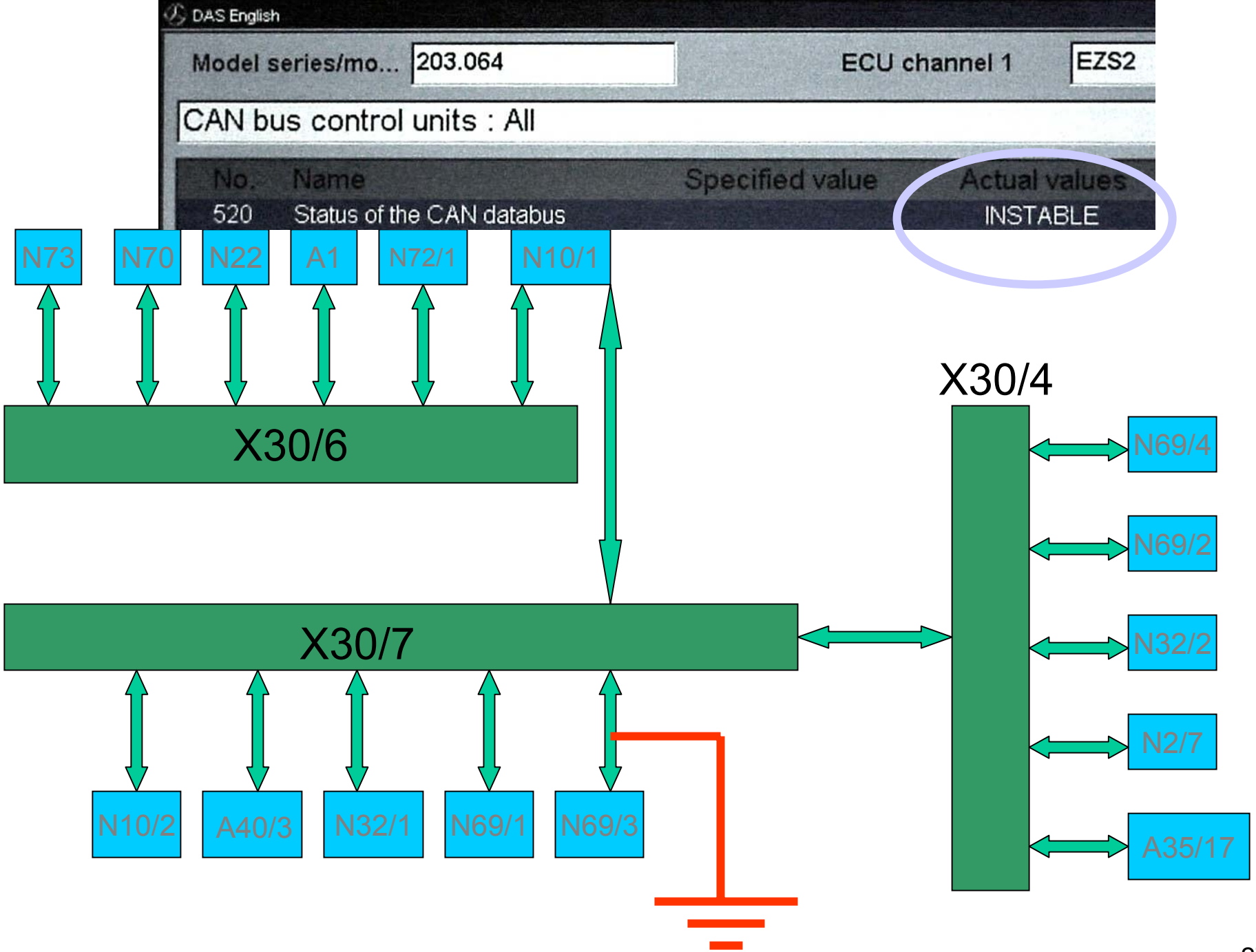
DAS English
Model series/mo...
203.064
ECU channel 1
EZS2
CAN bus control units : All
No.
Name
Specified value
Actual values
520
Status of the CAN databus
INSTABLE
N73
N70
N22
A1
N72/1
N10/1
X30/6
X30/4
X30/7
N69/4
N69/2
N32/2
N2/7
A35/17
N10/2
A40/3
N32/1
N69/1
N69/3

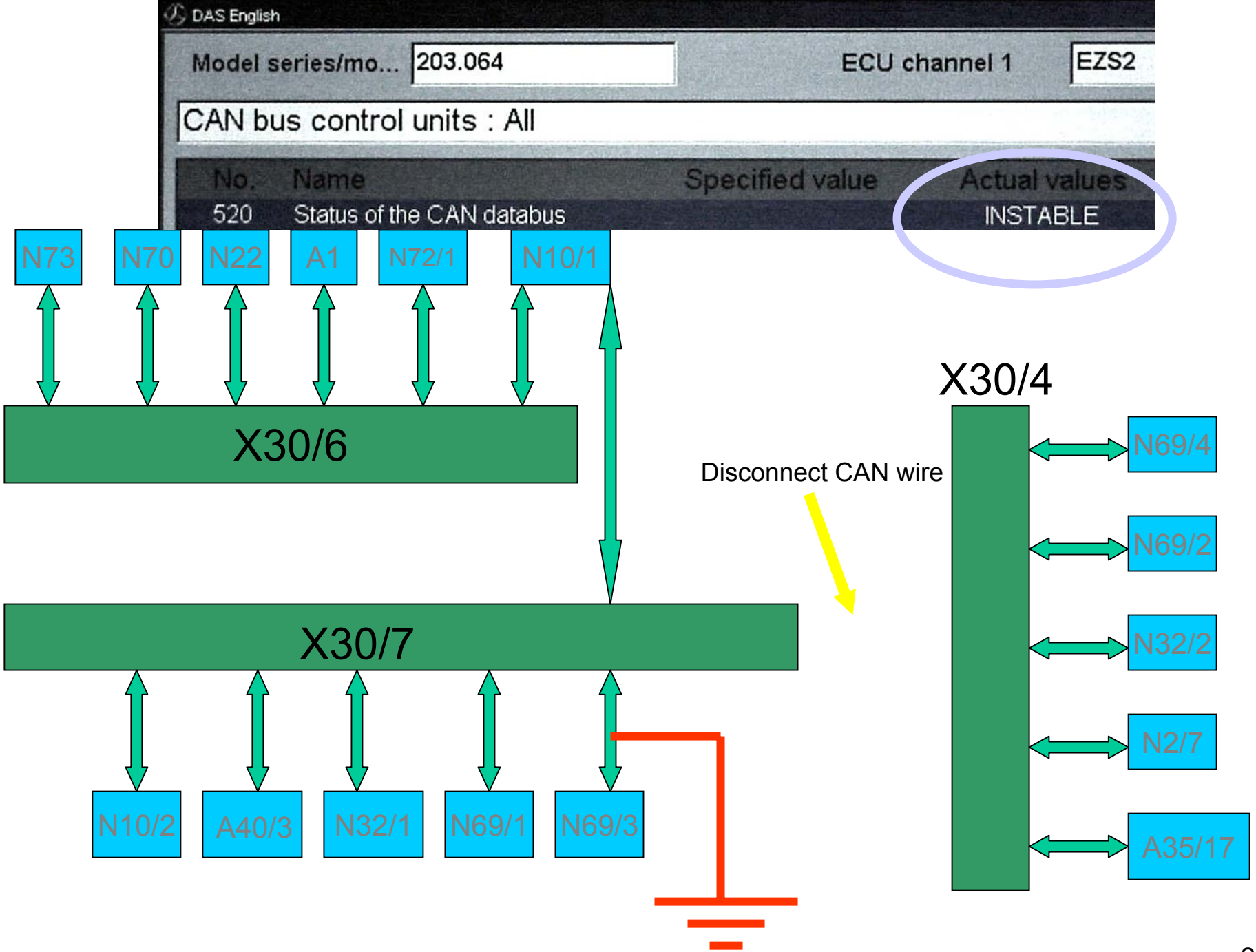
DAS English
Model series/mo...
203.064
ECU channel 1
EZS2
CAN bus control units : All
No.
Name
Specified value
Actual values
520
Status of the CAN databus
INSTABLE
N73
N70
N22
A1
N72/1
N10/1
X30/6
X30/7
N10/2
A40/3
N32/1
N69/1
N69/3
Disconnect CAN wire
X30/4
N69/4
N69/2
N32/2
N2/7
A35/17

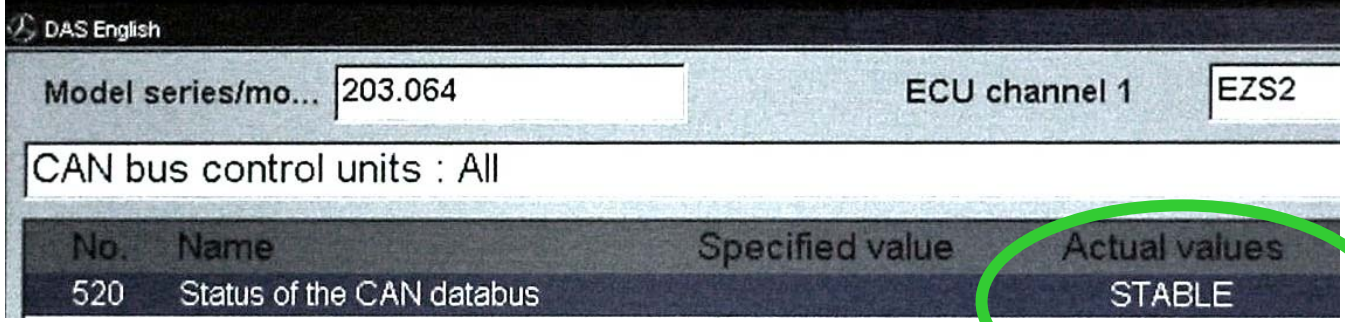

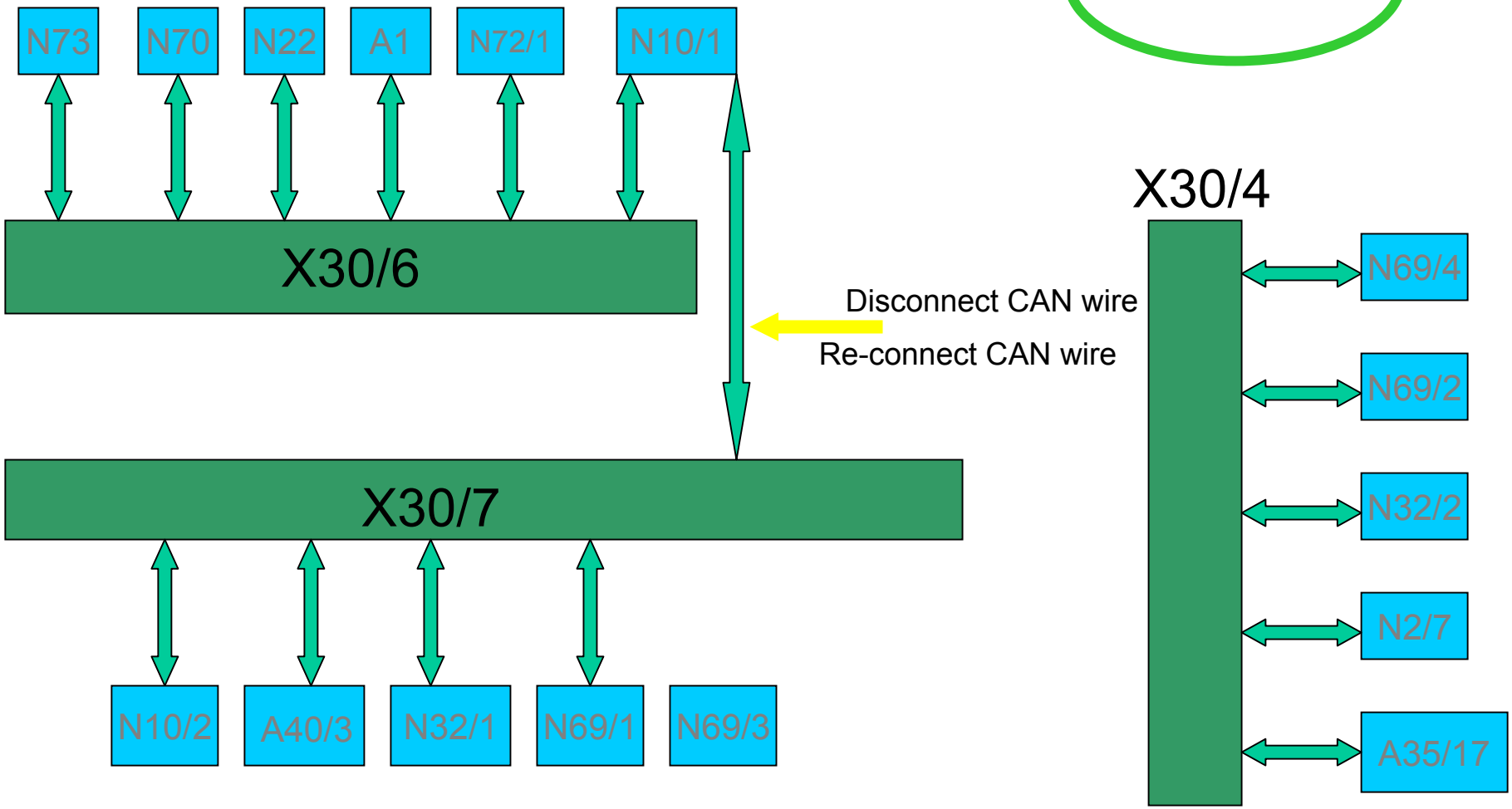

Re-connect CAN wires until network instable again

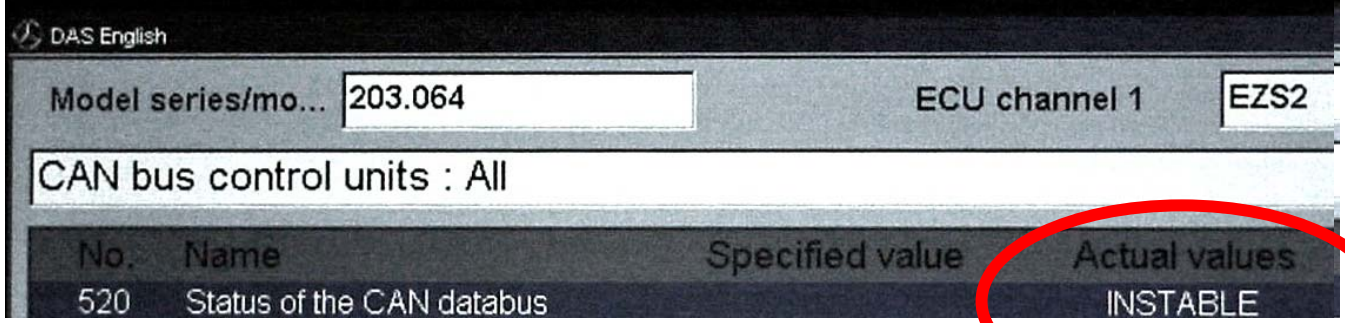
DAS English
Model series/mo...
203.064
ECU channel 1
EZS2
CAN bus control units : All
No.
Name
Specified value
Actual values
520
Status of the CAN databus
INSTABLE

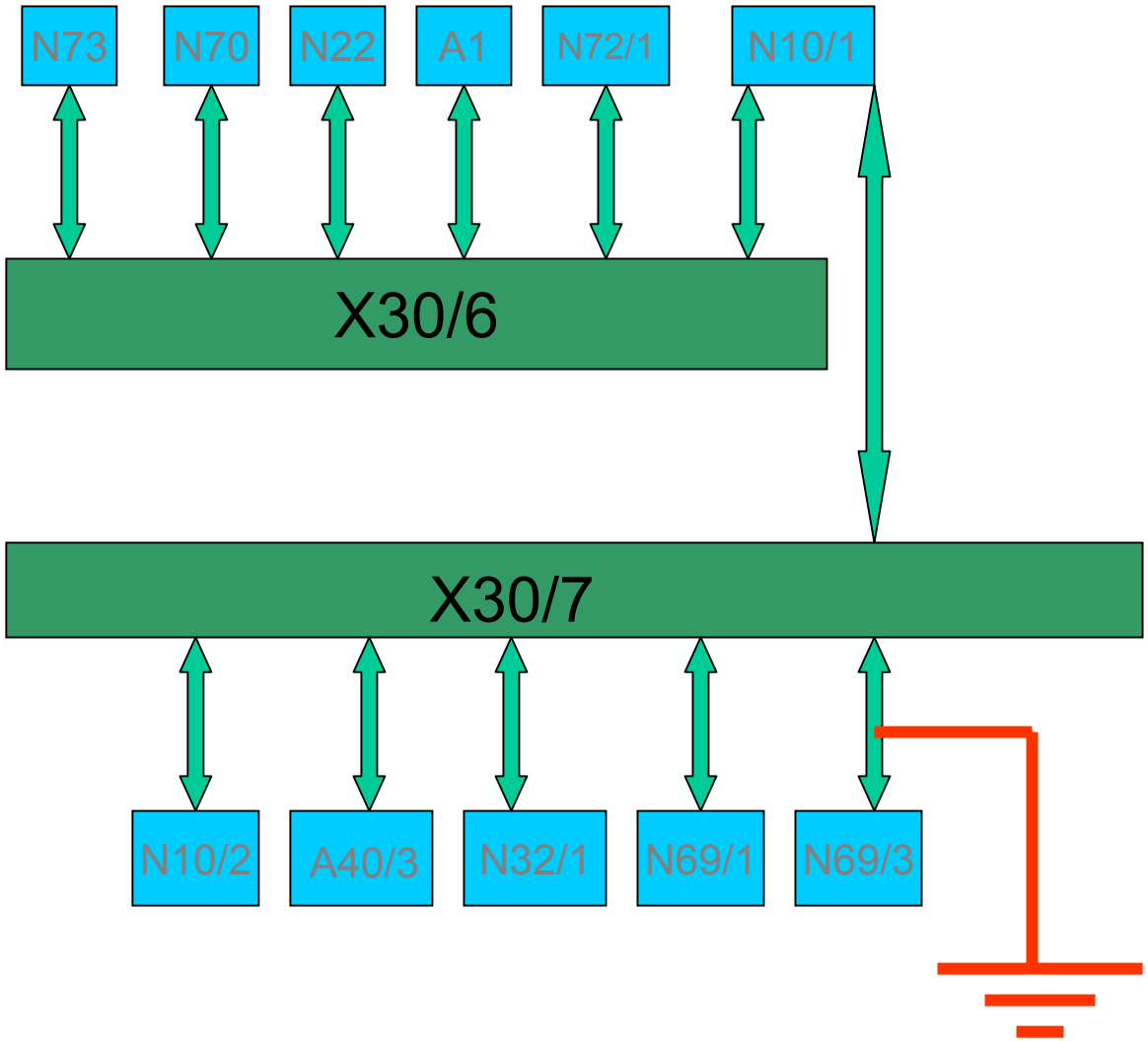
N73
N70
N22
A1
N72/1
N10/1
X30/6
X30/7
N10/2
A40/3
N32/1
N69/1
N69/3

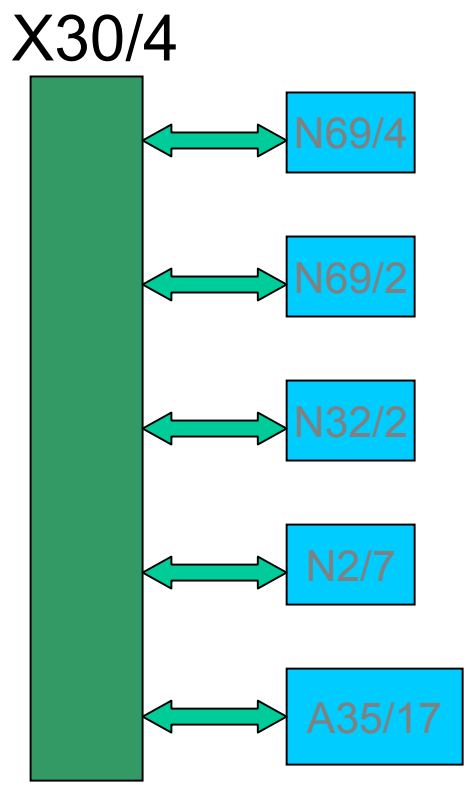
X30/4
N69/4
N69/2
N32/2
N2/7
A35/17

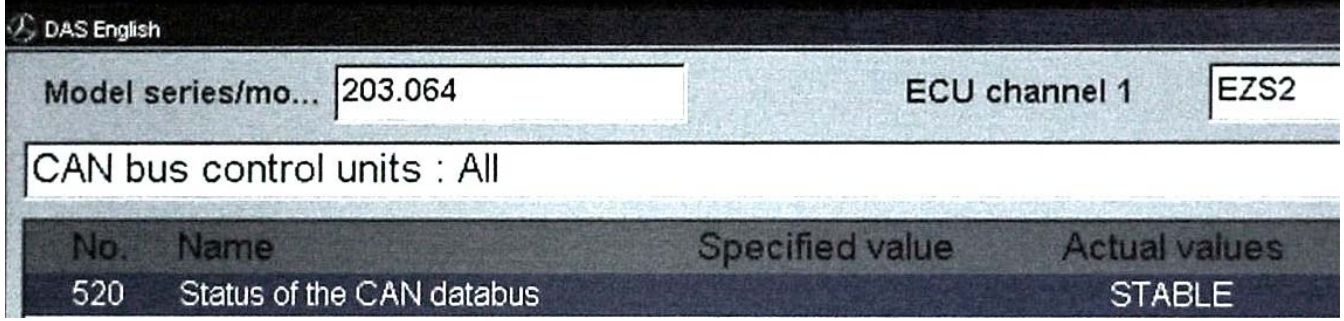
DAS English
Model series/mo...
203.064
ECU channel 1
EZS2
CAN bus control units : All
No.
Name
Specified value
Actual values
520
Status of the CAN databus
STABLE

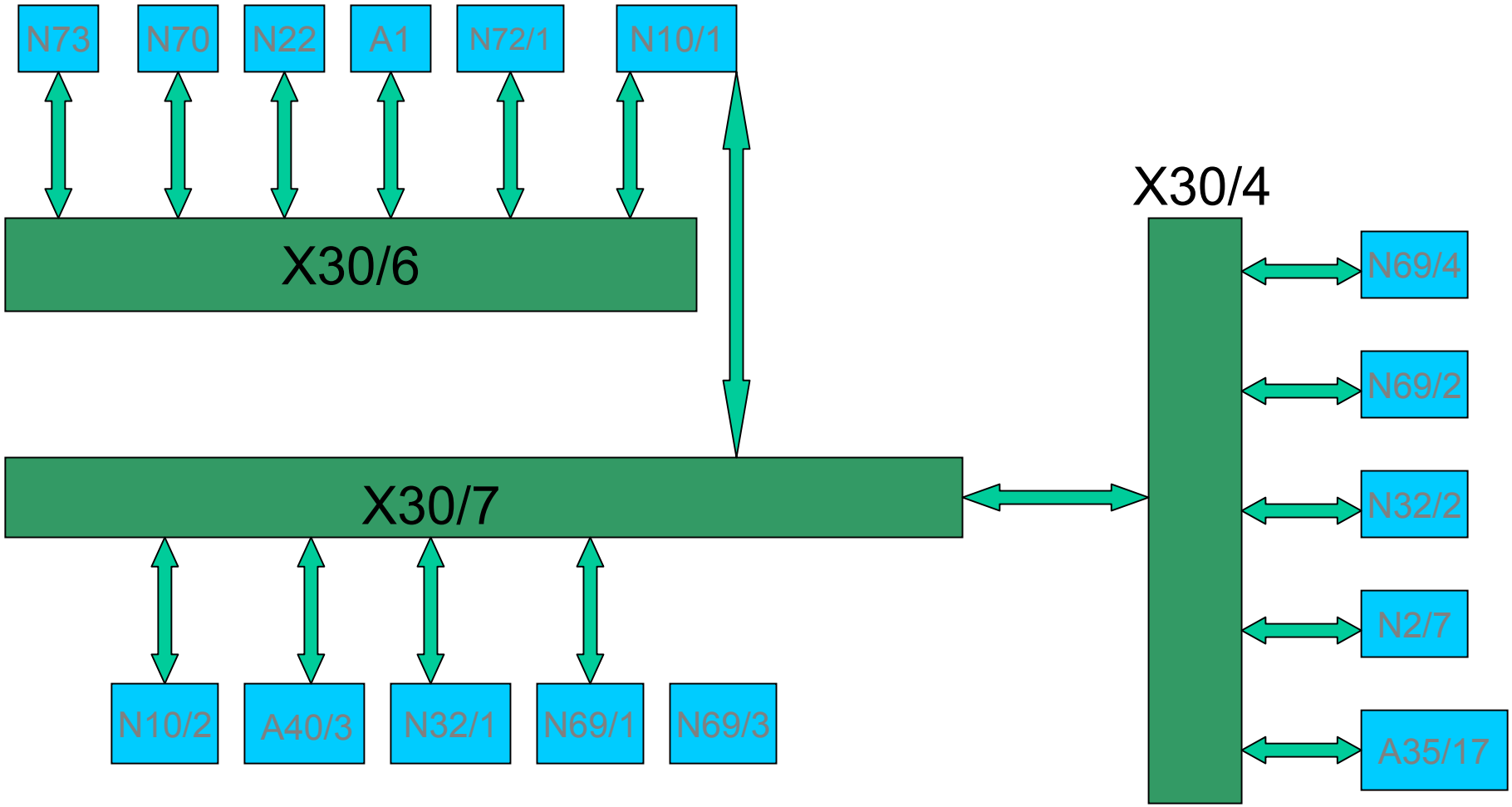
N73
N70
N22
A1
N72/1
N10/1
X30/6
X30/4
X30/7
N69/4
N69/2
N32/2
N2/7
A35/17
N10/2
A40/3
N32/1
N69/1
N69/3

Diagnostic Exercise For CAN B

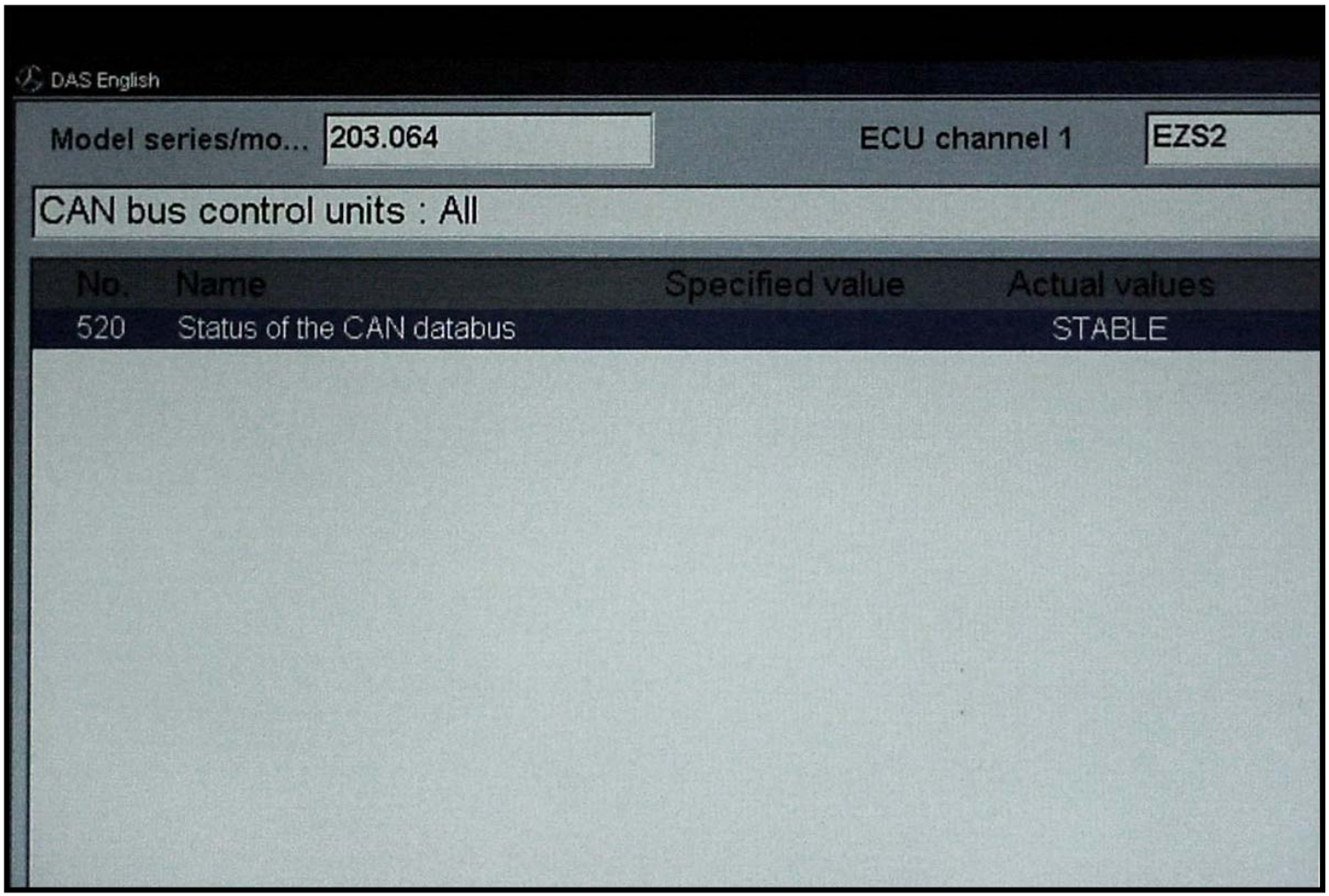

Press the F2 key for a list of control units that the EIS can communicate with

Diagnostic Exercise For CAN B

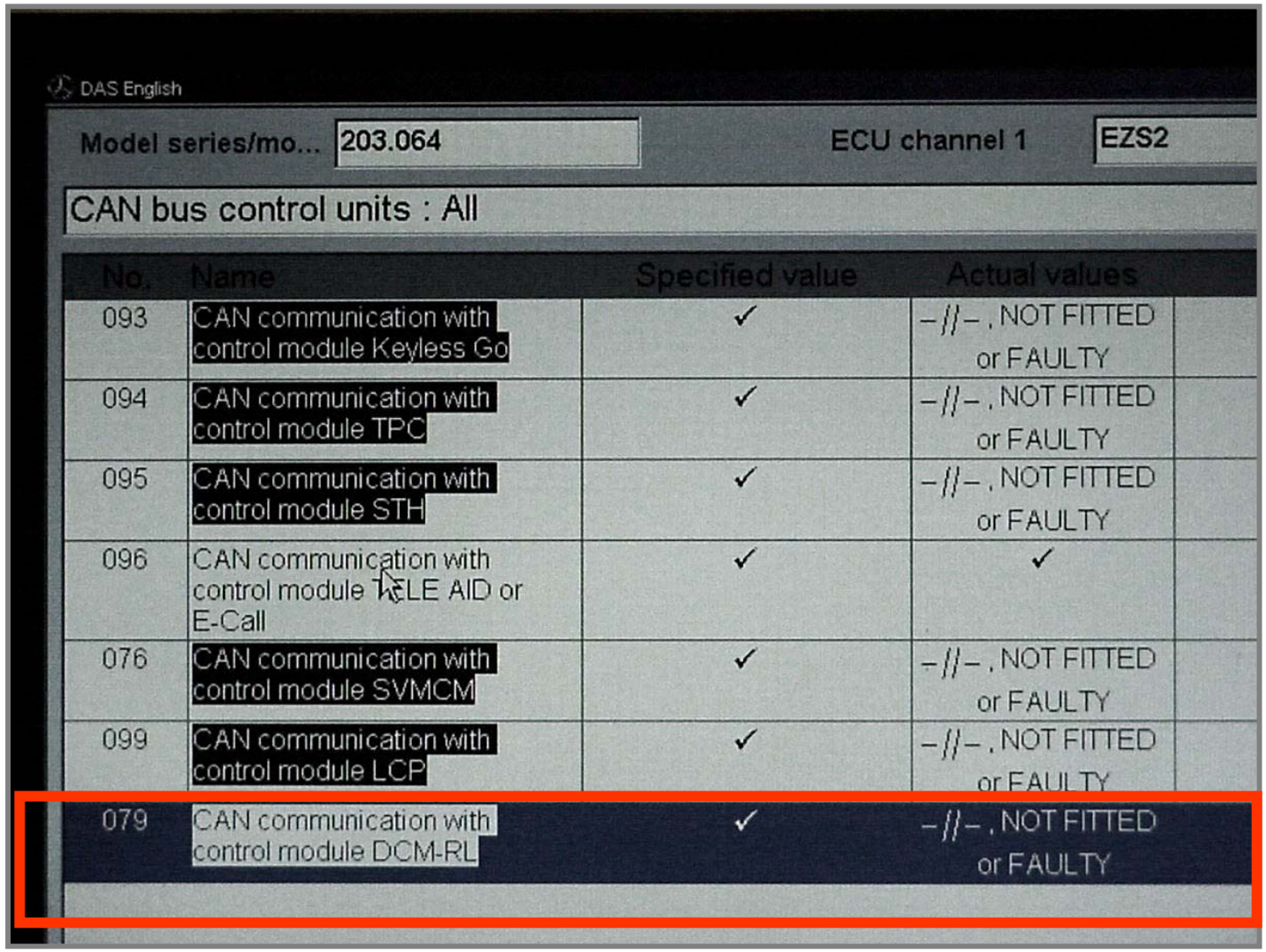

Reference Materials for Further Reading

WIS documents :

GF00.19-P-0001PP	Extended vehicle network function
SN00.19-P-0004GH	Complete networking (163 as of 9/01)
GF54.00-P-0004A	Data bus system function
GF54.00-P-0005A	CAN data bus, function
GF54.00-P-0005-01A	CAN data bus data telegram
GF54.00-P-0005-02A	CAN data bus specification
GF54.00-P-0005-04A	CAN data bus applications
GF54.00-P-0999ZZ	CAN data bus, contents, function description

Additional Information for Other Models

CAN B Voltages W203, C215 & W220

- CAN H active: 0.65V, dormant: 0.025V
- CAN L active: 4.65V, dormant: 11.0V

CAN B Voltages W202, C208 & W210

- CAN H active: 1.8V, dormant 0.025V
- CAN L active: 3.2V, dormant 4.8V

CAN B on W203 with connector X35/2

(Vehicles from approx. 06/02)

Note: Always refer to the wiring diagram for your model and year.

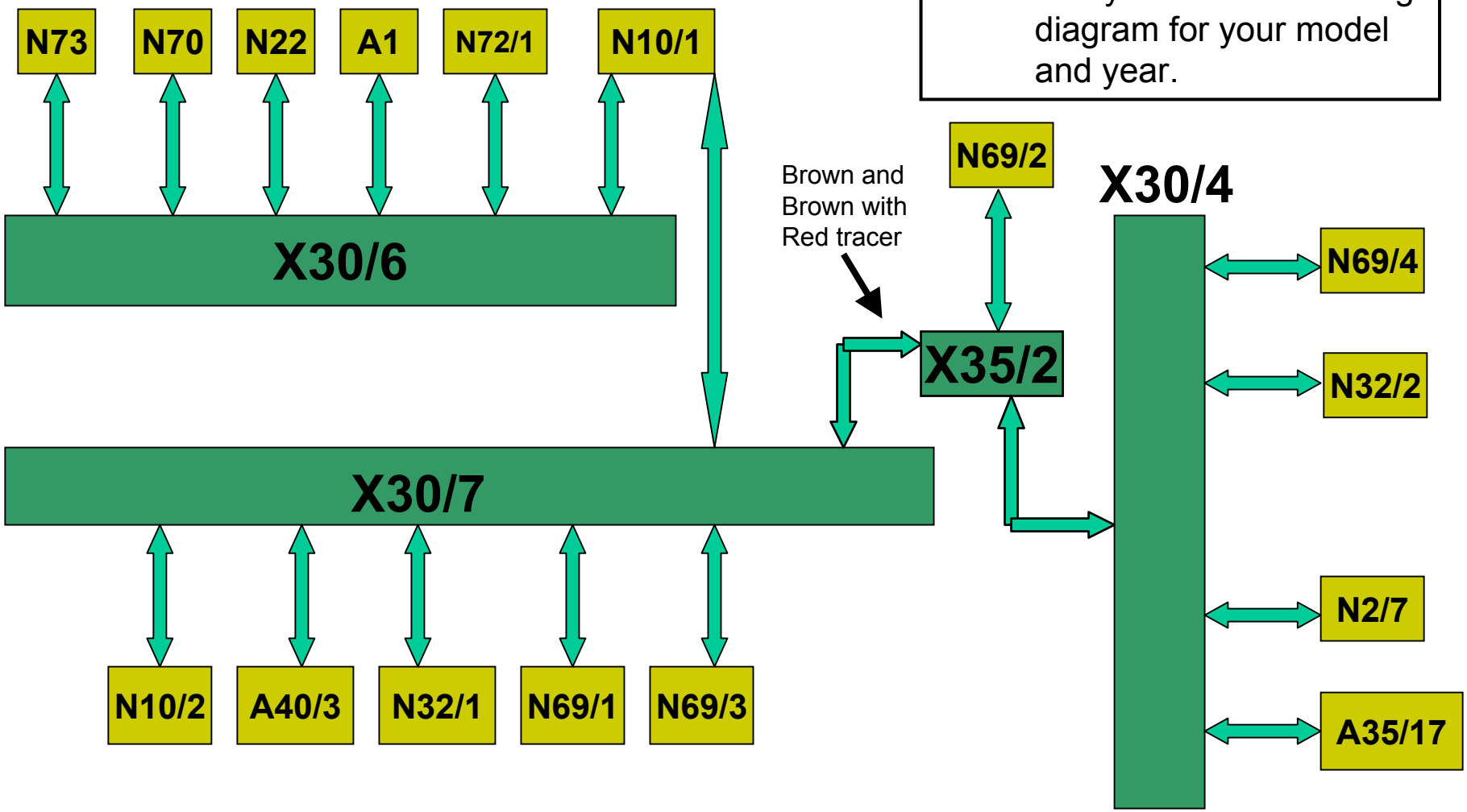

X35/2

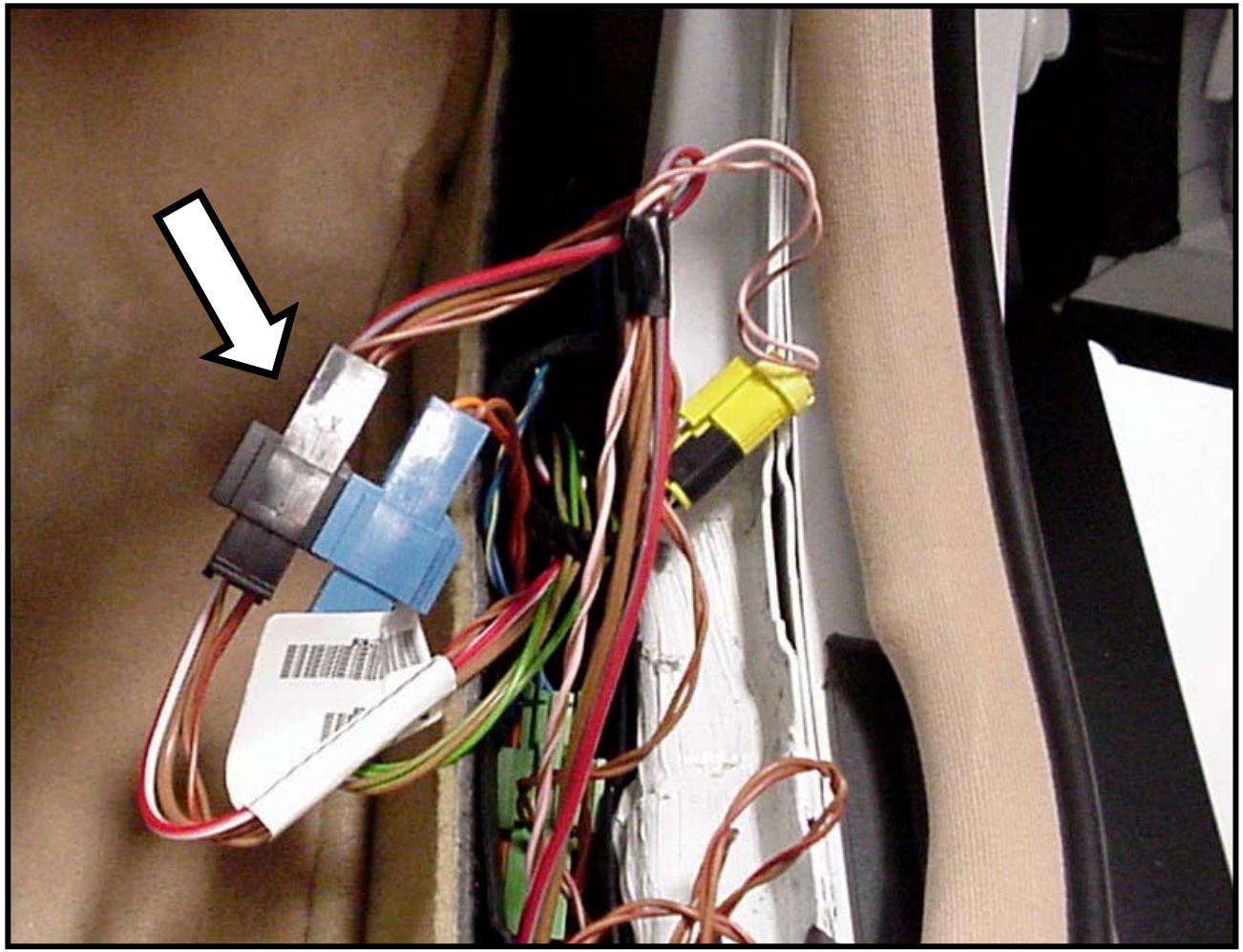

Location: Right front sill

W220 CAN B

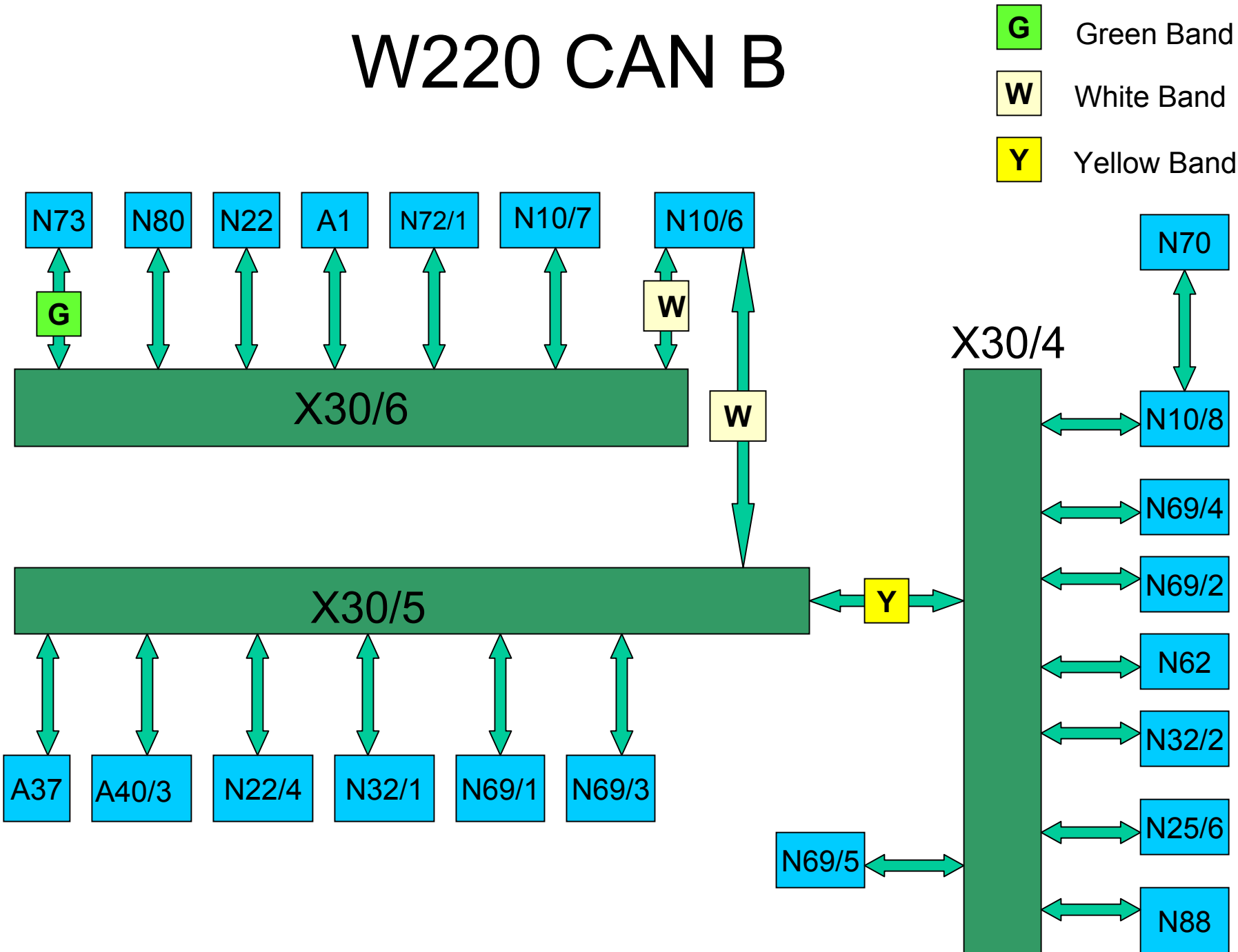
G
Green Band
W
White Band
Y
Yellow Band
N73
N80
N22
A1
N72/1
N10/7
N10/6
G
W
X30/6
W
X30/5
Y
X30/4
N70
N10/8
N69/4
N69/2
N62
N32/2
N25/6
N88
A37
A40/3
N22/4
N32/1
N69/1
N69/3
N69/5

C215 CAN B

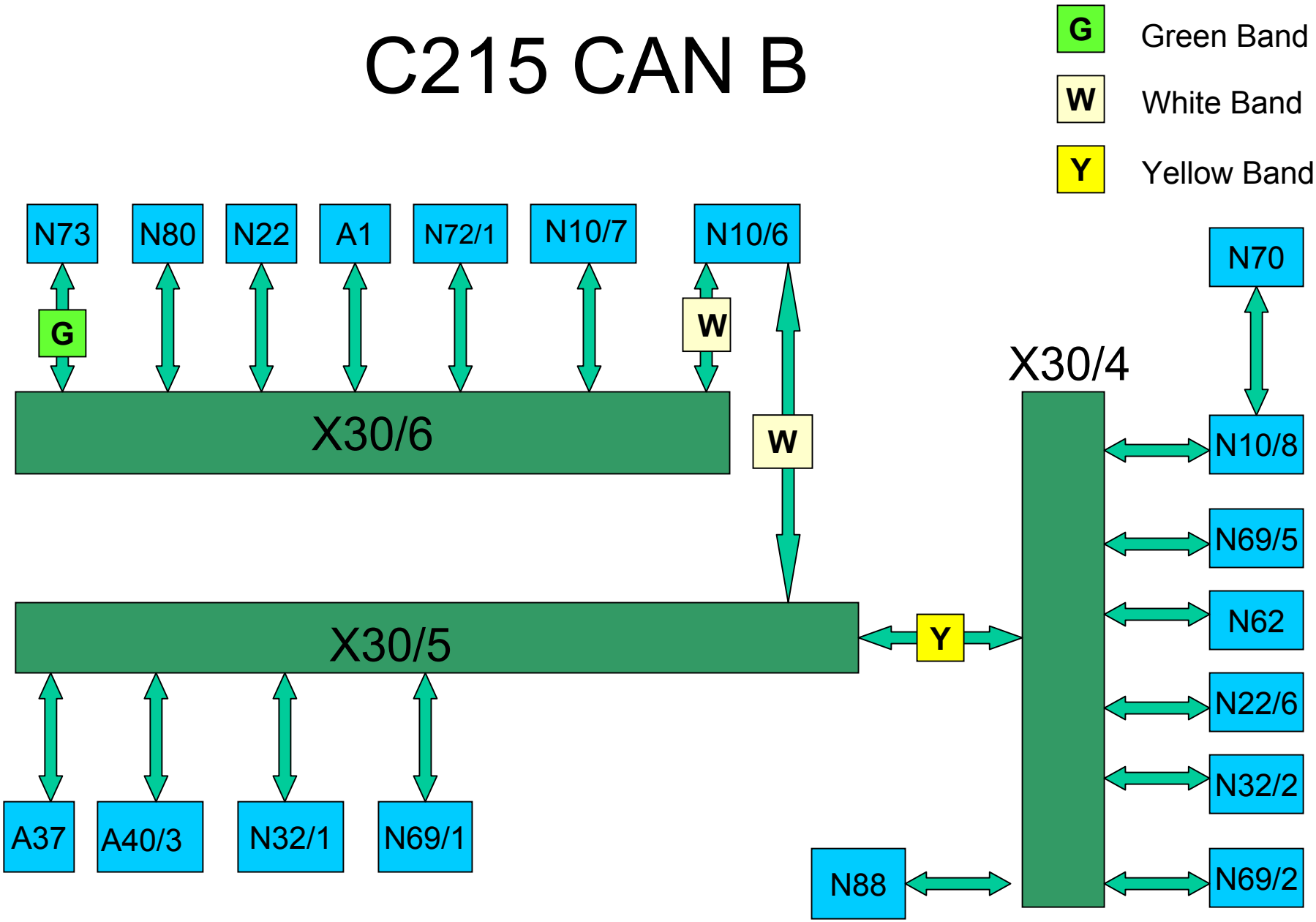
G
Green Band
W
White Band
Y
Yellow Band
N73
N80
N22
A1
N72/1
N10/7
N10/6
G
W
X30/6
W
X30/4
N70
N10/8
N69/5
N62
N22/6
N32/2
N69/2
X30/5
Y
A37
A40/3
N32/1
N69/1
N88

Location of X30's for C215 & W220

X30/6

X30/4

X30/5

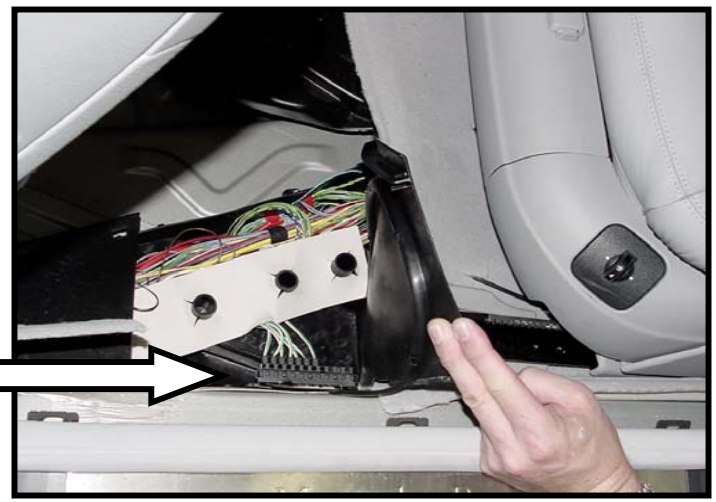

C215 / W220 Connector X30/6

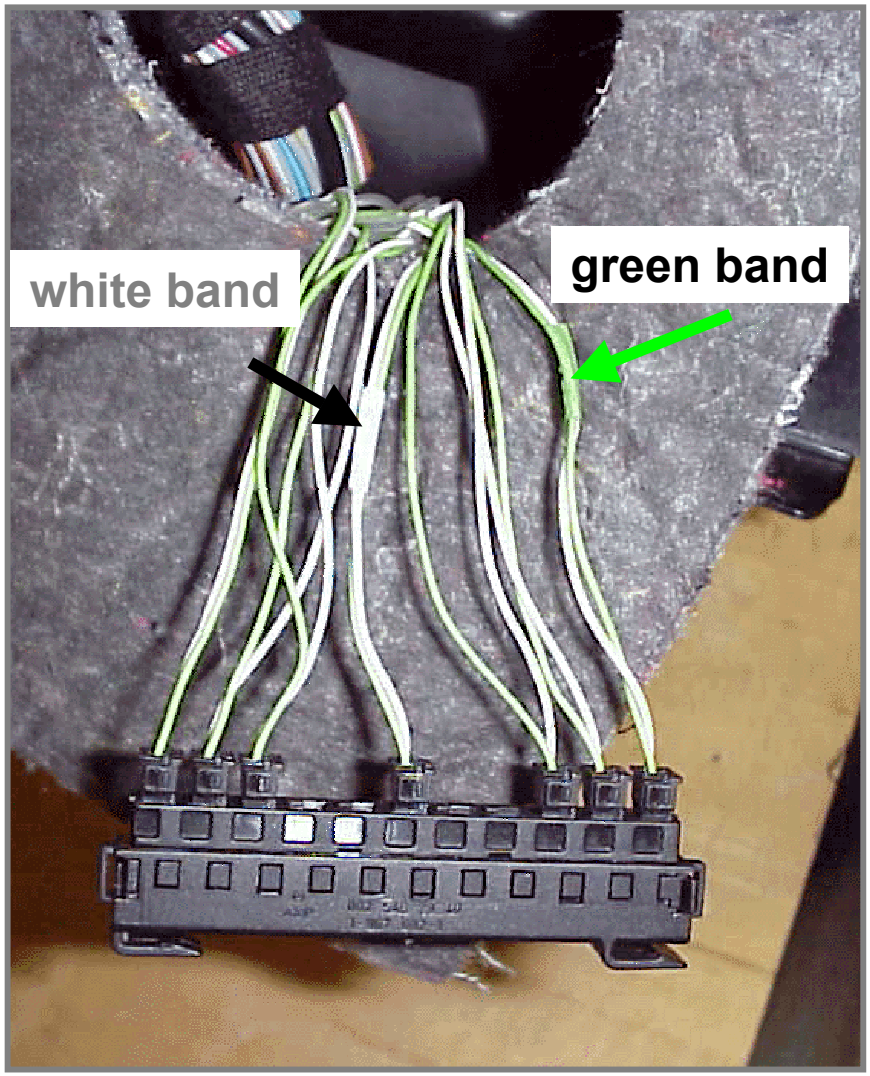

- Wires with the green band go to N73 (EIS)
- Wires with the white band go to N10/6 (Left SAM)

C215 / W220 Connector X30/5

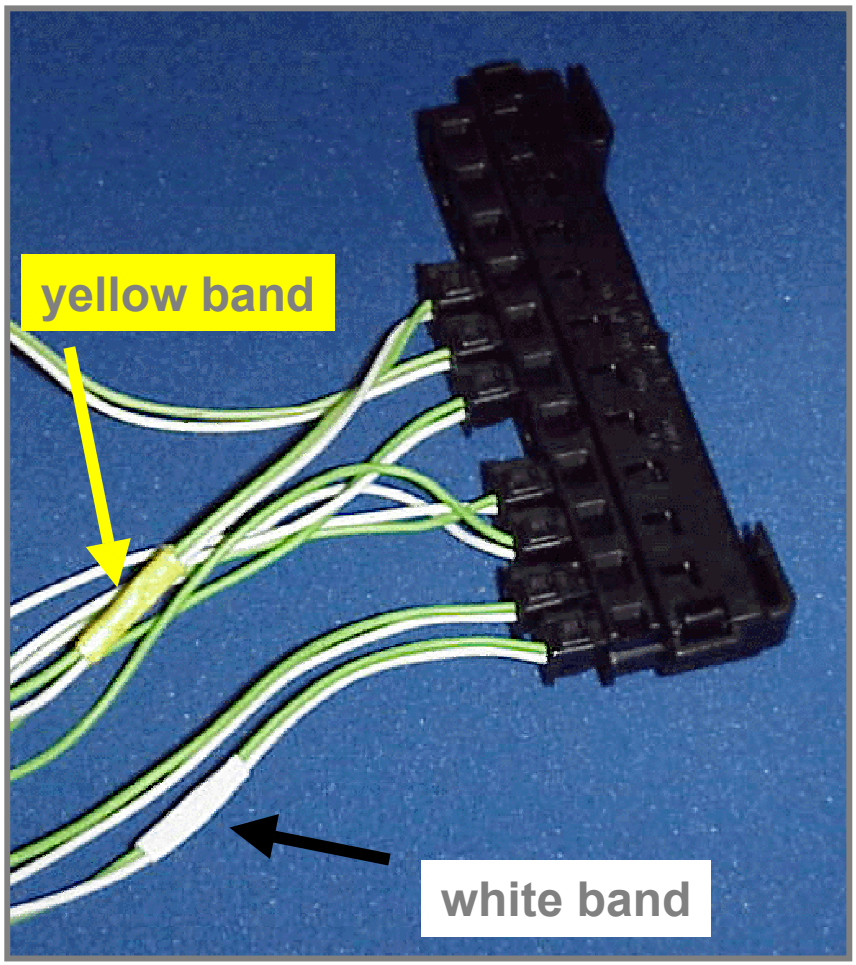

- Wires with the white band go to N10/6 (Left SAM)
- Wires with the yellow band go to X30/4

Control Units Connected to X30/6 C215 / W220

- N73 - Electronic Ignition Switch
- N80 - Steering Column Module
- N22 - Automatic Air Conditioning
- A1 - Instrument Cluster
- N72/1 - Upper Control Panel
- N10/7 - Right SAM
- N10/6 - Left SAM

Control Units Connected to X30/5 C215 / W220

- A37 - PSE
- A40/3 - COMAND
- N22/4 - Rear automatic air conditioning
- N32/1 - Electric seat adjustment left
- N69/1 - Door control module 1
- N69/3 - Door control module 2
- N10/6 - Left SAM

Control Units Connected to X30/4 C215 / W220

- N10/8 - Rear SAM
- N70 - Overhead control panel (Via N10/8)
- N69/2 - Door control module 2
- N69/4 - Door control module 4
- N62 - Parktronics
- N32/2 - Electric seat adjustment right
- N25/6 - Electric seat adjustment rear
- N88 - Tire pressure monitoring
- N69/5 - KeyLess Go

W202, 208, 210 CAN B

- Electronic Ignition Switch
  EIS - N73
- Signal Acquisition and Actuation Module
  SAM - N10/1
- Door Control Modules
  DCM's - 1 for each door N69/1-4
- Pneumatic System Equipment
  PSE - A37
- Electronic Seat Adjustment
  ESA's - N32/1&2
- Overhead Control Panel
  OCP - N70
- Lower Control Panel
  LCP - N72

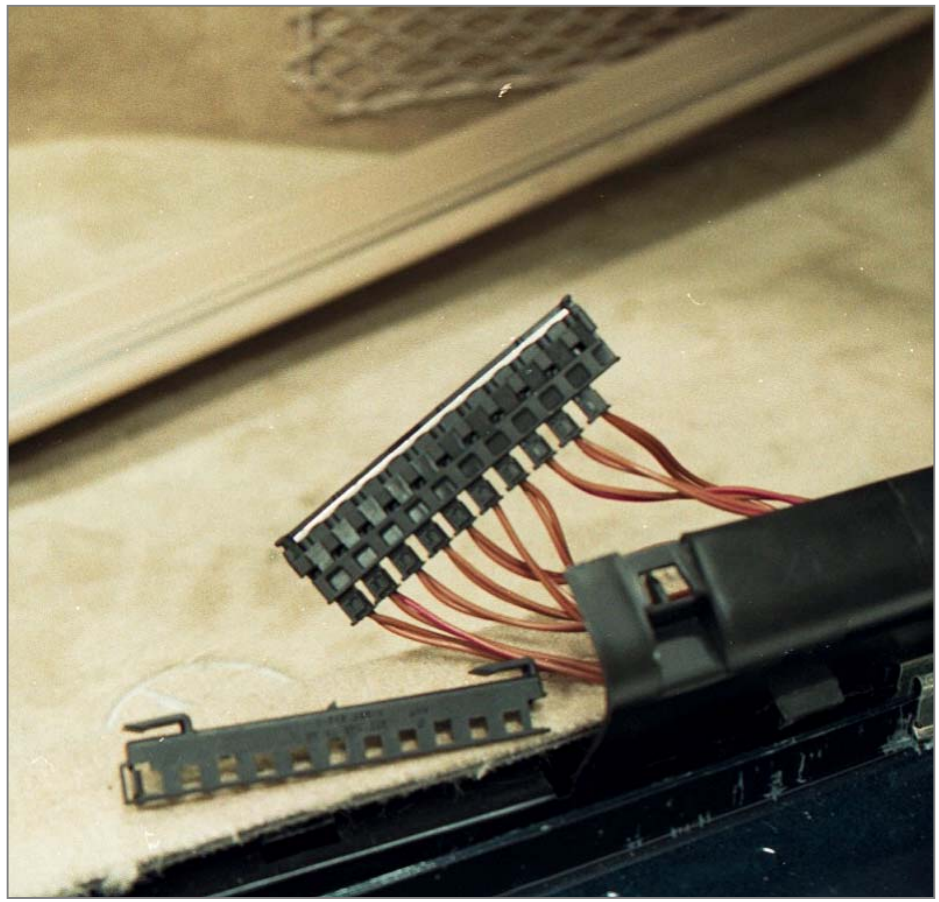

X30/7 - Right front door sill

W210 CAN B

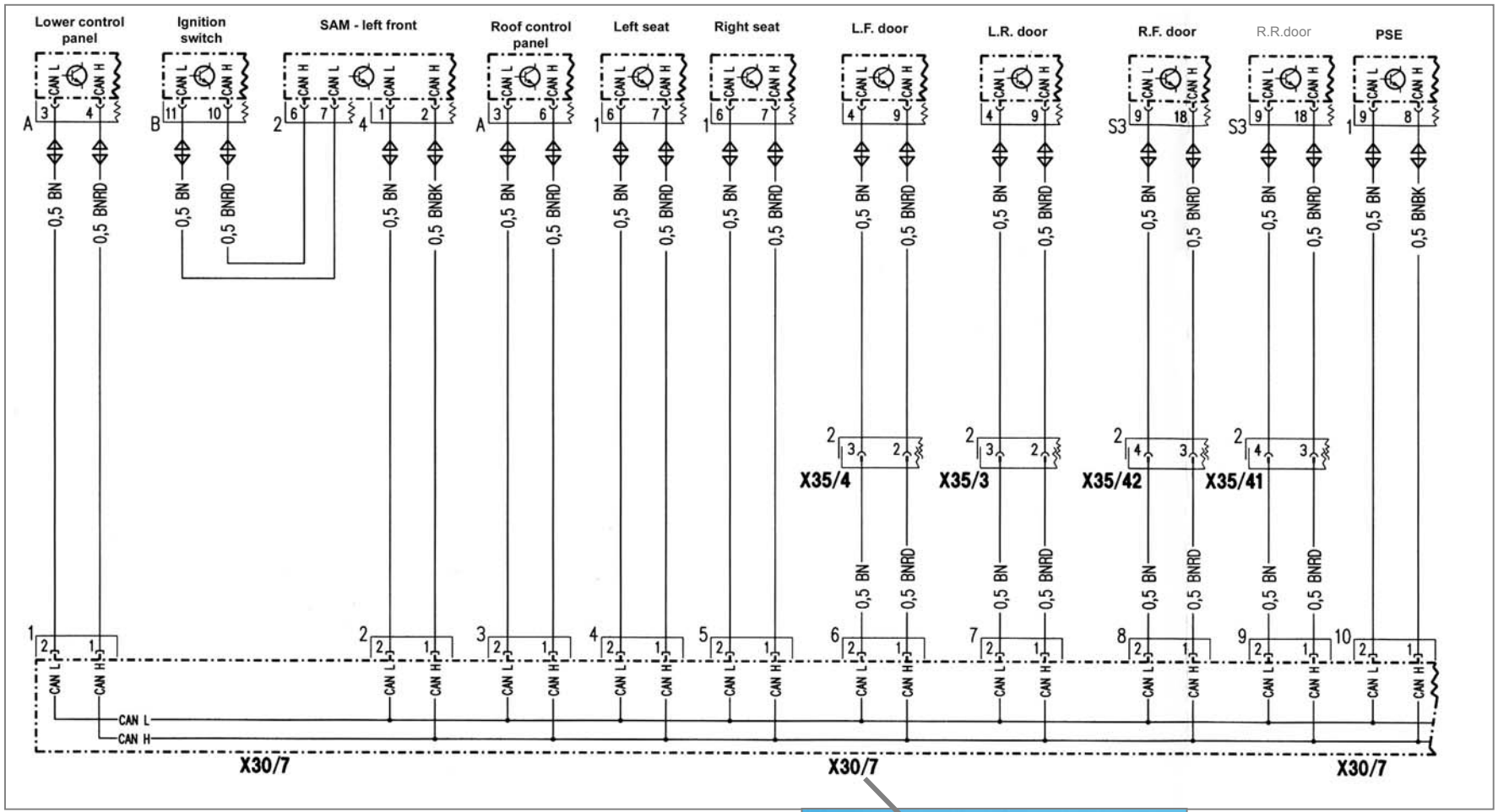
Lower control panel
Ignition switch
SAM - left front
Roof control panel
Left seat
Right seat
L.F. door
L.R. door
R.F. door
R.R.door
PSE
CAN L
CAN H
0,5 BN
0,5 BNRD
0,5 BNBK
X35/4
X35/3
X35/42
X35/41
X30/7
X30/7
X30/7

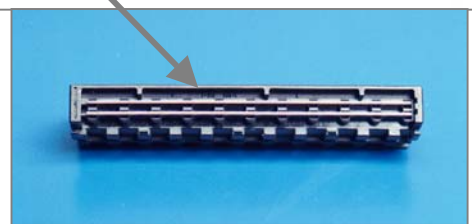

W202, 208 & 210 CAN B

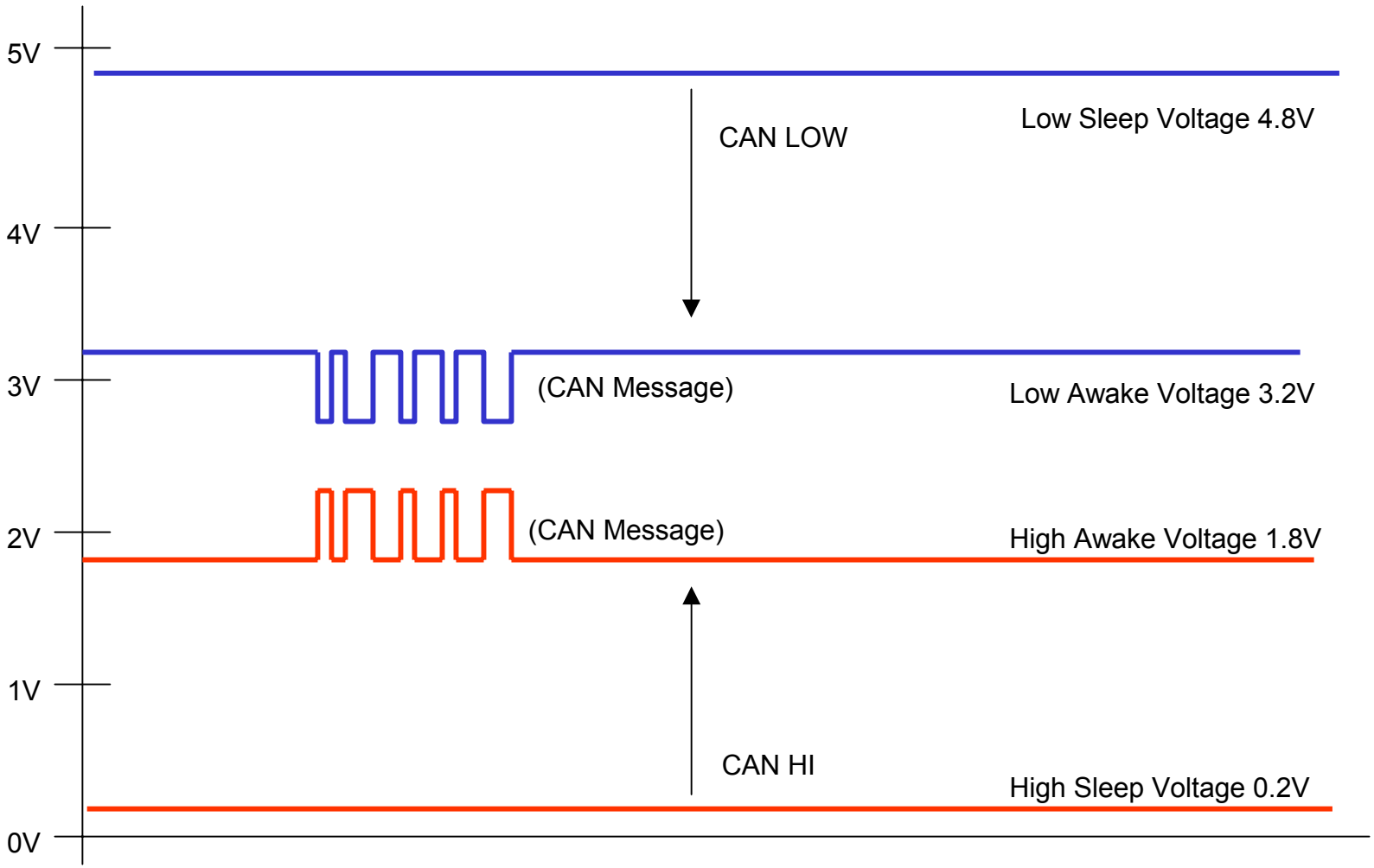

G Class (463) Networking

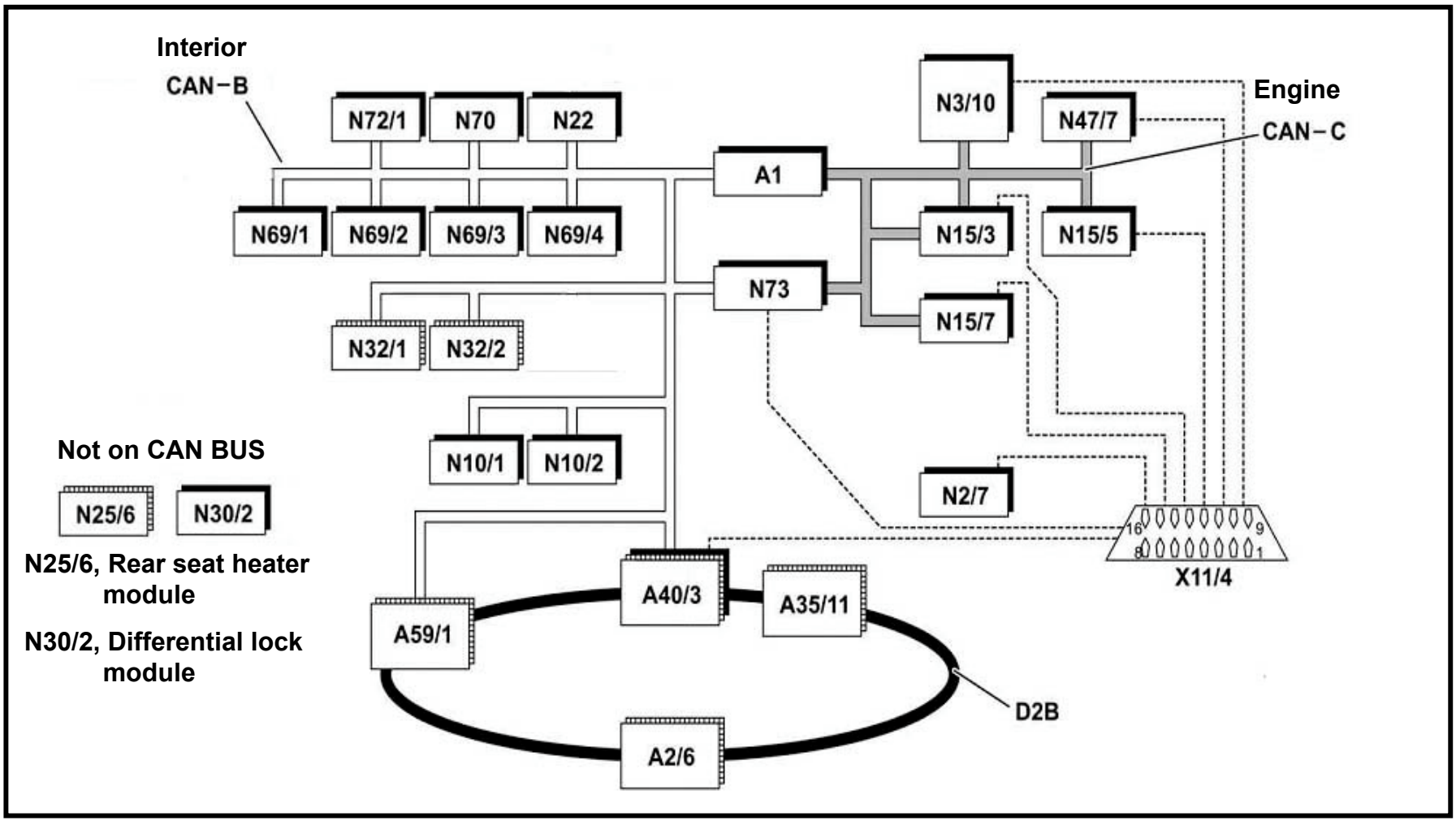

CAN B Diagram for 463

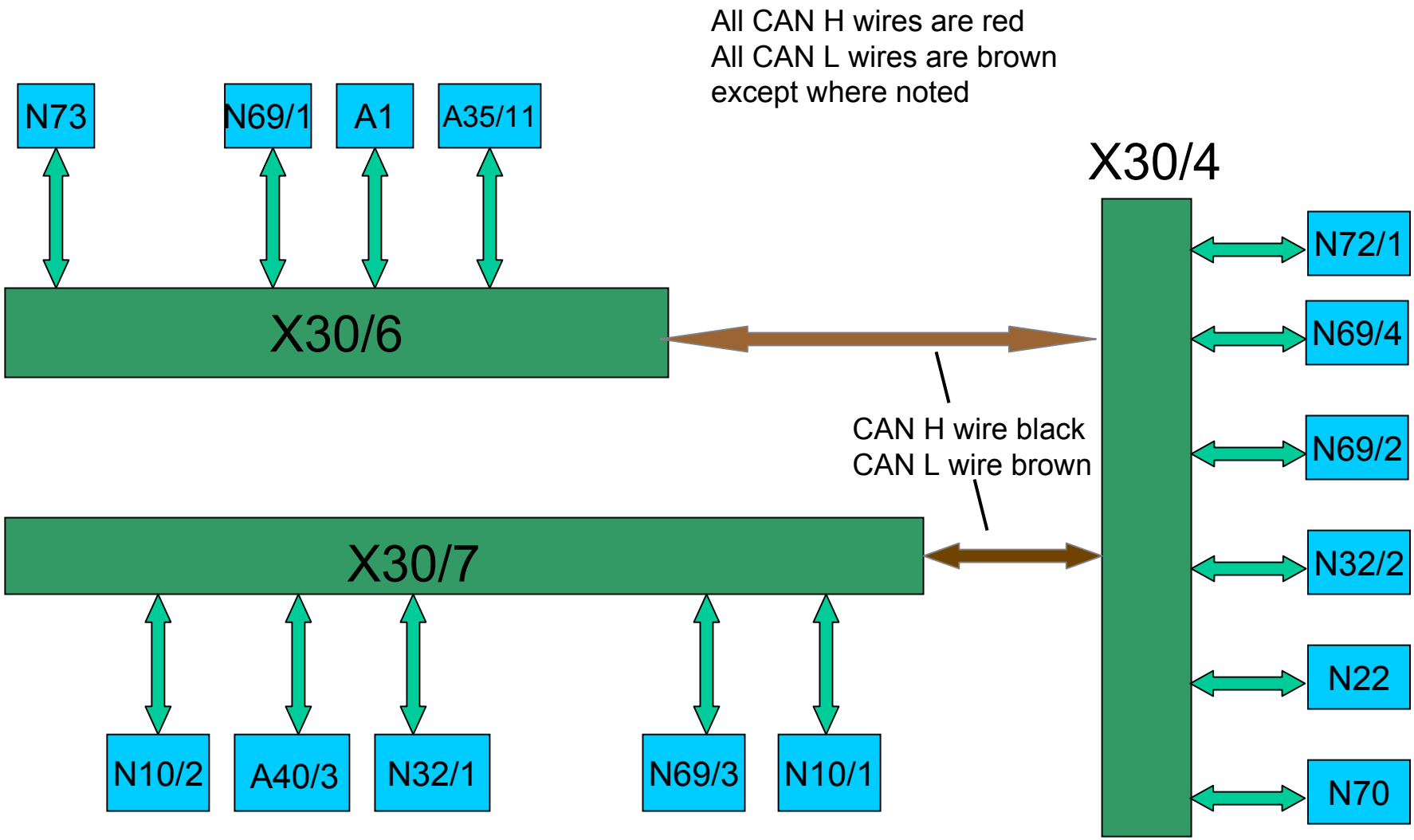

463 CAN B Connector Locations

X30/6 under drivers dash

X30/4 and X30/7 in passenger kick panel

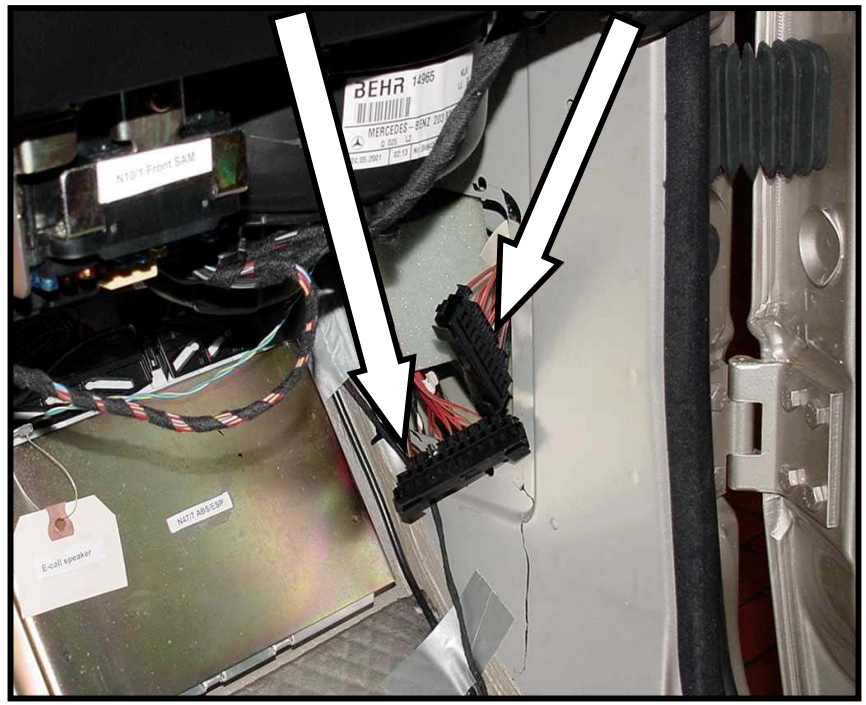

CAN wires are labeled with a tag on X30/4 & X30/7

463 CAN C Connector

Location: Right side of center console

R230 CAN B , CAN C & D2B

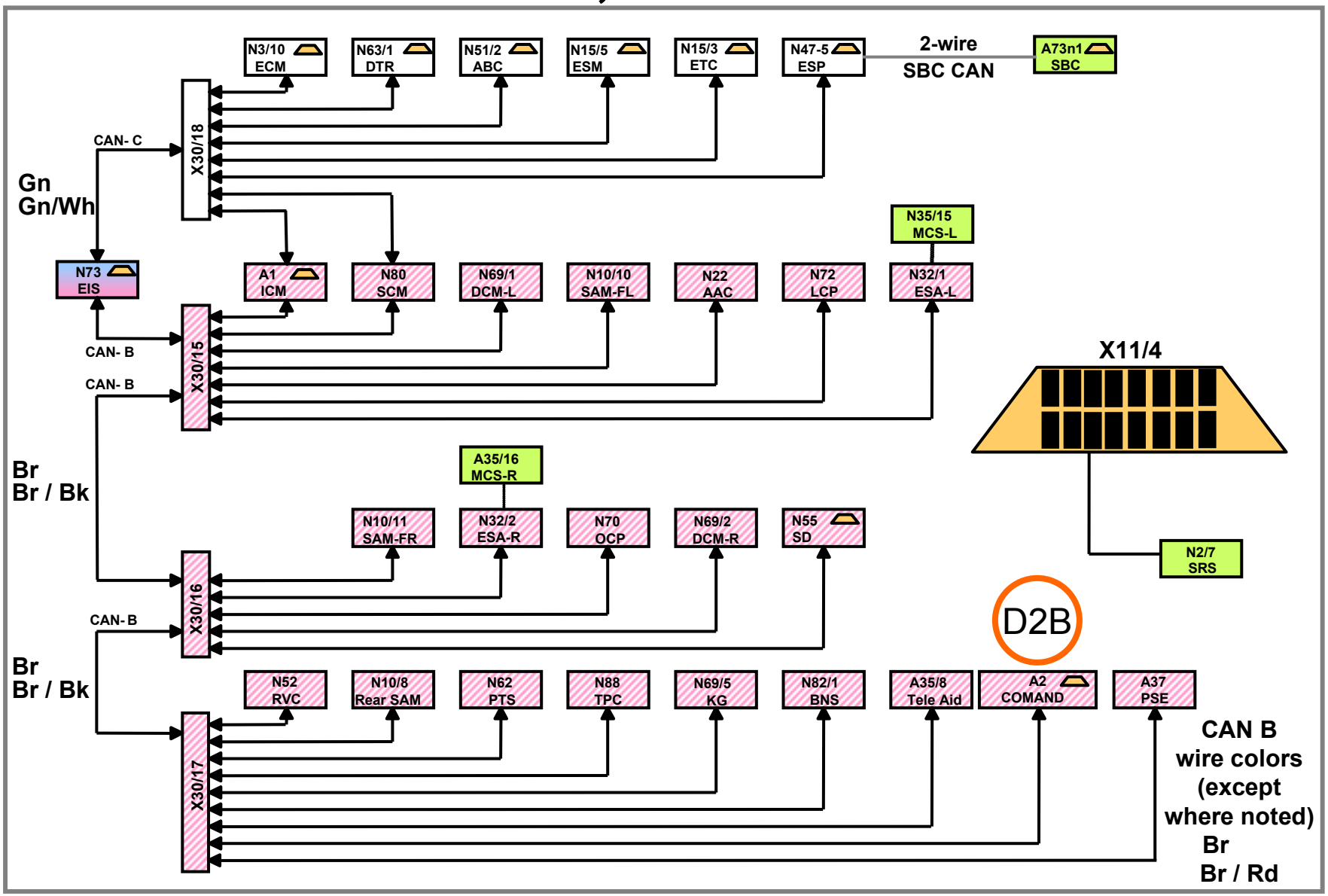

CAN C

CAN B

not connected to either CAN

R230 CAN B Connector X30/15

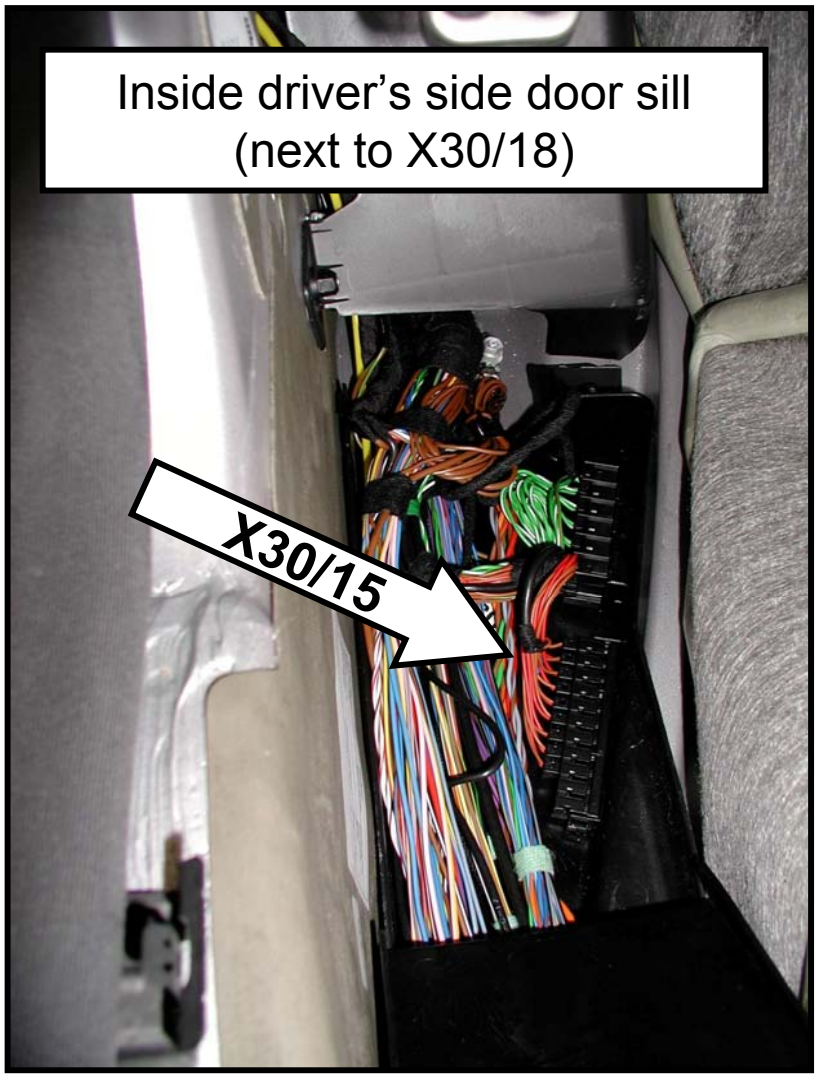

EIS (N73)

IC (A1)

SCM (N80)

DCM-L (N69/1)

SAM-FL (N10/10)

AAC (N22)

LCP (N72)

ESA-L (N32/1) ← MCS-L (N35/15)

R230 CAN B Connector X30/16

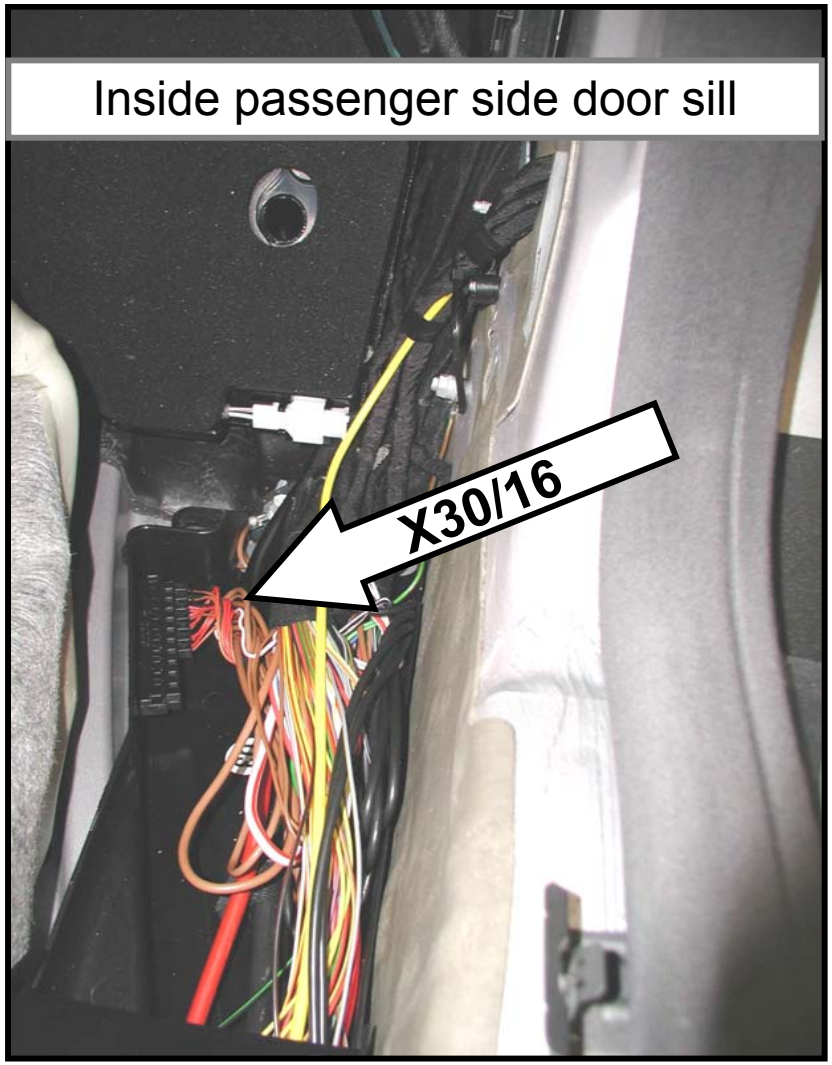

SAM-FR (N10/11)

OCP (N70)

DCM-R (N69/2)

SD (N55)

ESA-R (N32/2) ← MCS-R (A35/16)

R230 CAN B Connector X30/17

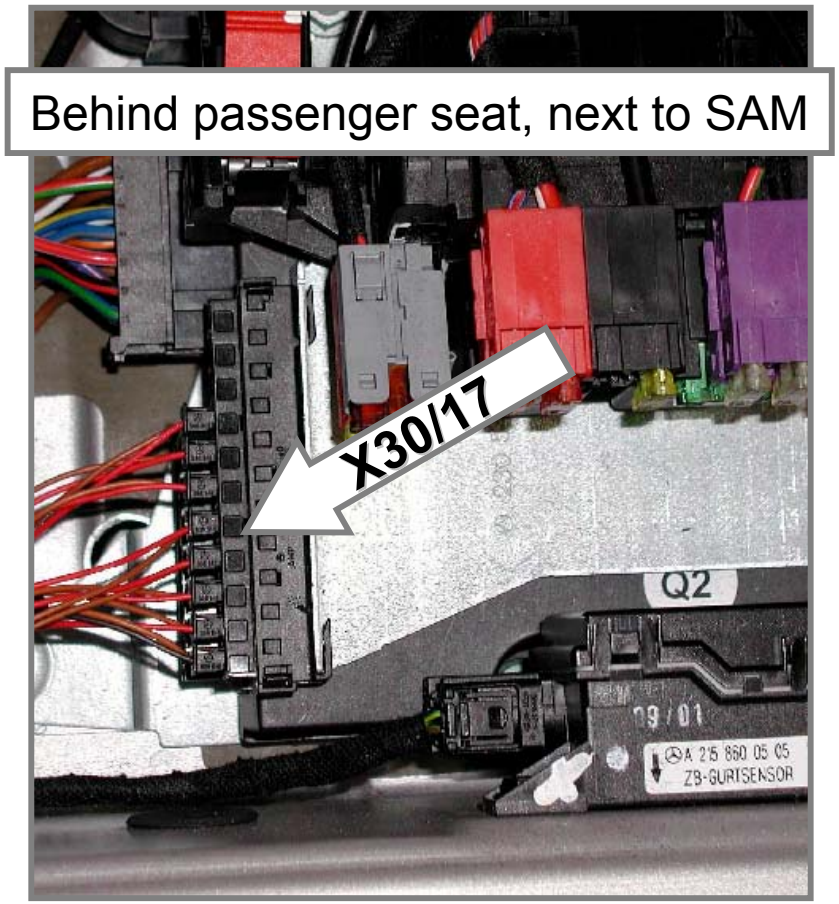

RVC (N52)

SAM-Rear (N10/8)

PTS (N62)

TPC (N88)

KG (N69/5)

BNS (N82/1)

TELE AID (A35/8)

COMAND (A2) ← D2B

PSE (A37)

R230 CAN C Connector X30/18

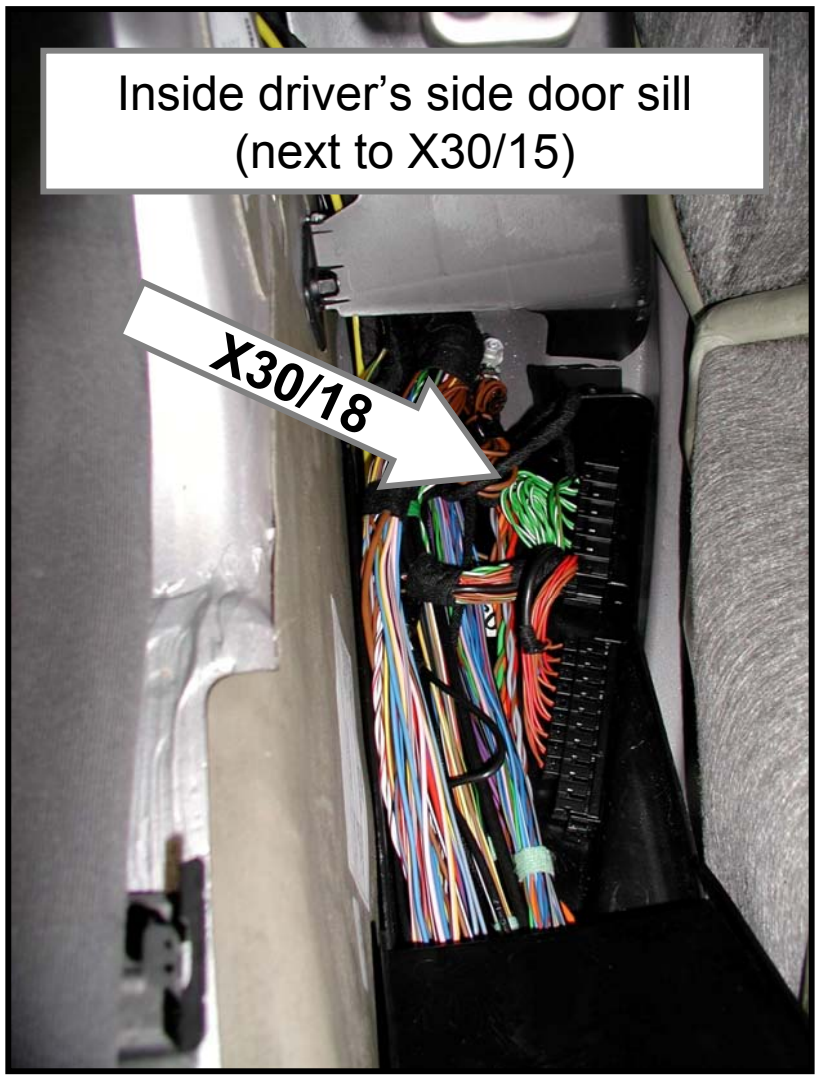

EIS (N73)

IC (A1)

SCM (N80)

ECM (N3/10)

DTR (N63/1)

ABC (N5/12)

ESM (N15/5)

ETC (N15/3)

ESP (N47-5) ← SBC (A73n1)

W211 Networking Diagram

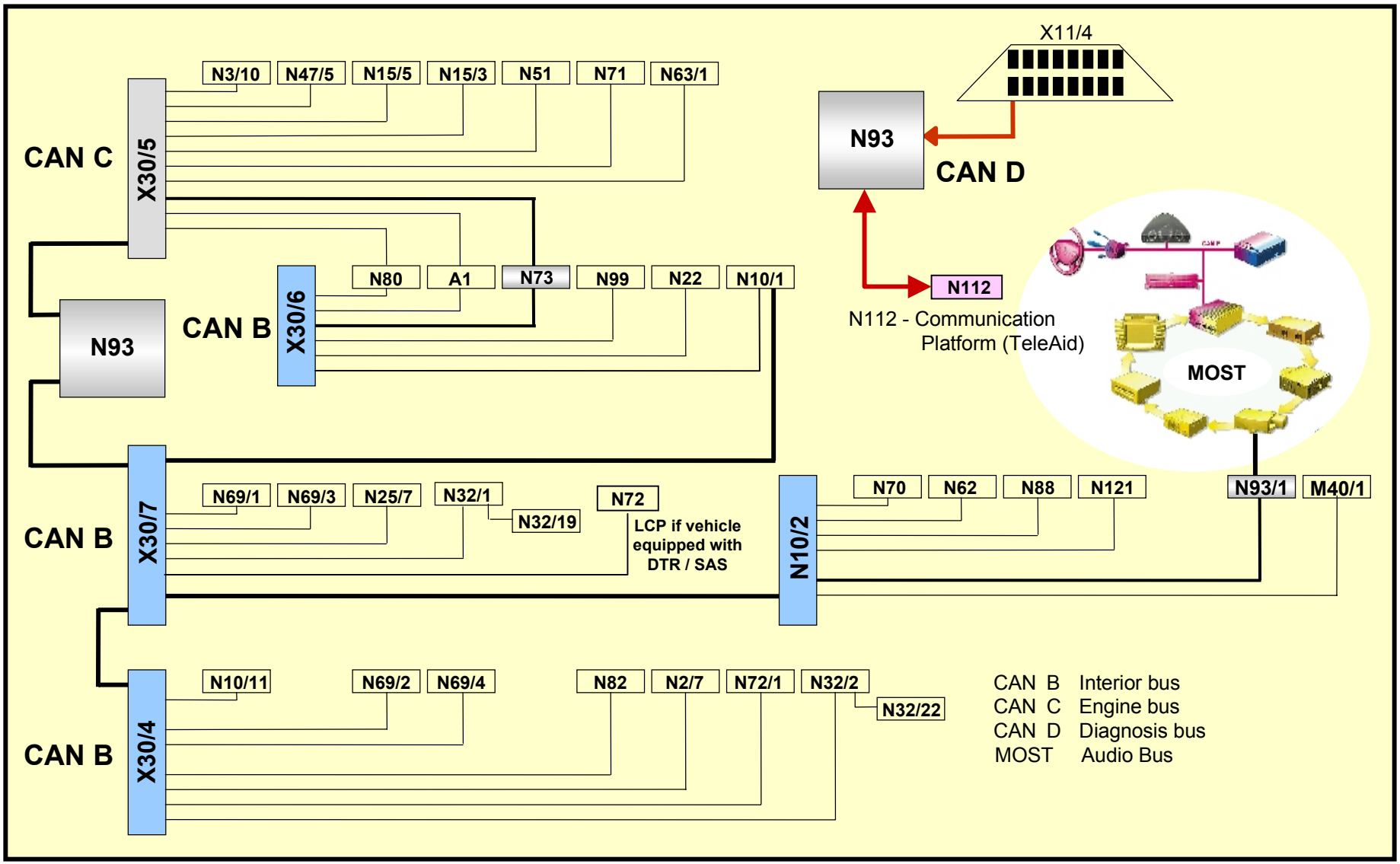

W211 Networking Legend

CAN C

N3/10	ME-SFI Control Module
N15/3	ETC - Electronic Transmission Control
N15/5	ESM - Electronic Selector Module
N47/5	ESP - Electronic Stability Program
N51	SAS - Semi-Active Air Suspension
N63/1	DTR - Distronic Control Module
N71	HRA - Headlamp Range Adjustment
N93	CGW - Central Gateway Module

CAN B

M40/1	Pneumatic Pump of Dynamic Seat
N2/7	Supplemental Restraint System
N10/1	SAM-D - Driver-side
N10/2	SAM-R - Rear
N10/11	SAM-P - Passenger-side
N22	AAC - Automatic Air Conditioning Control
N25/7	HS and Seat Ventilation Control Module
N32/1	ESA - Left Front Seat Adjustment
N32/2	ESA - Right Front Seat Adjustment
N32/19	Left Front Dynamic Seat Control
N32/22	Right Front Dynamic Seat Control
N62	PTS - Parktronic Control
N69/1	DCM - Left Front Door Control Module
N69/2	DCM - Right Front Door Control Module
N69/3	DCM - Left Rear Door Control Module
N69/4	DCM - Right Rear Door Control Module
N70	OCP - Overhead Control Panel
N72/1	UCP - Upper Control Panel
N82	BCM - Battery Control Module
N88	TPC - Tire Pressure Monitor Control Module
N93/1	AGW - Audio Gateway Control Module
N99	SWH - Steering Wheel Heater
N121	RTL - Remote Trunk Locking Control Module

CAN C & B

A1	ICM - Instrument Cluster
N73	EIS - Electronic Ignition Switch Control
N80	SCM - Steering Column Module
N93	CGM - Central Gateway Module

CAN C Connector (X30/5)

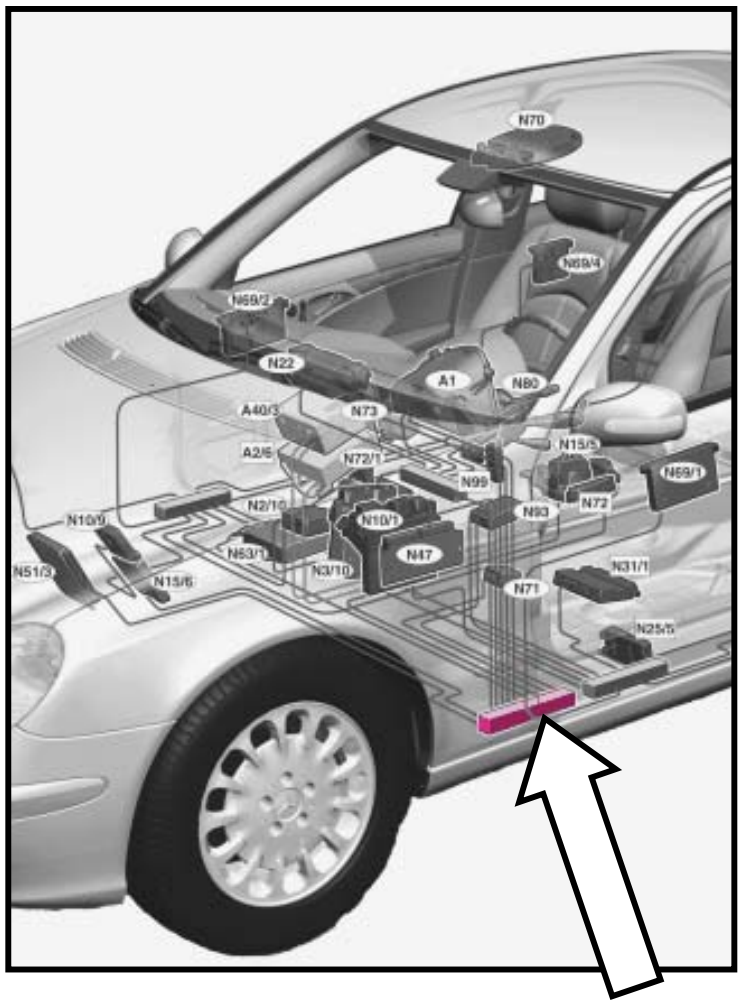

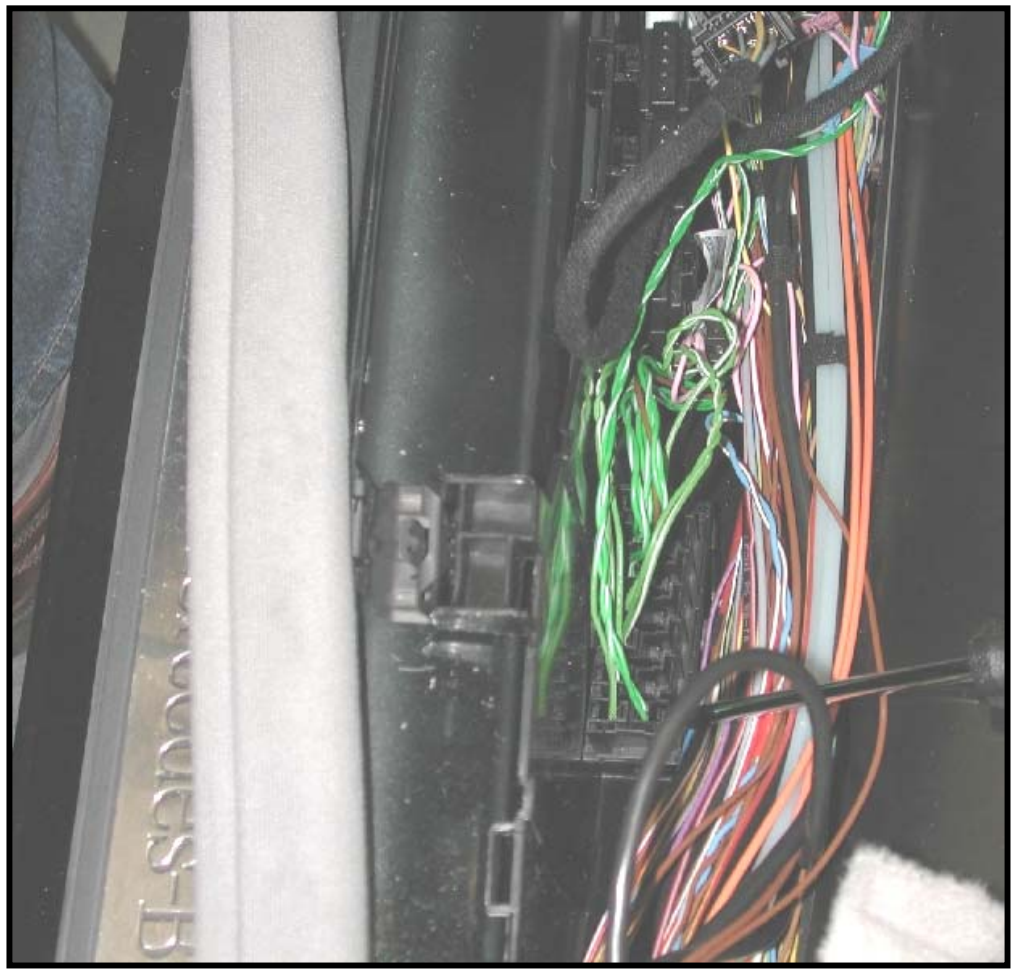

Location: Drivers rocker panel wiring trough

CAN B Connector (X30/4)

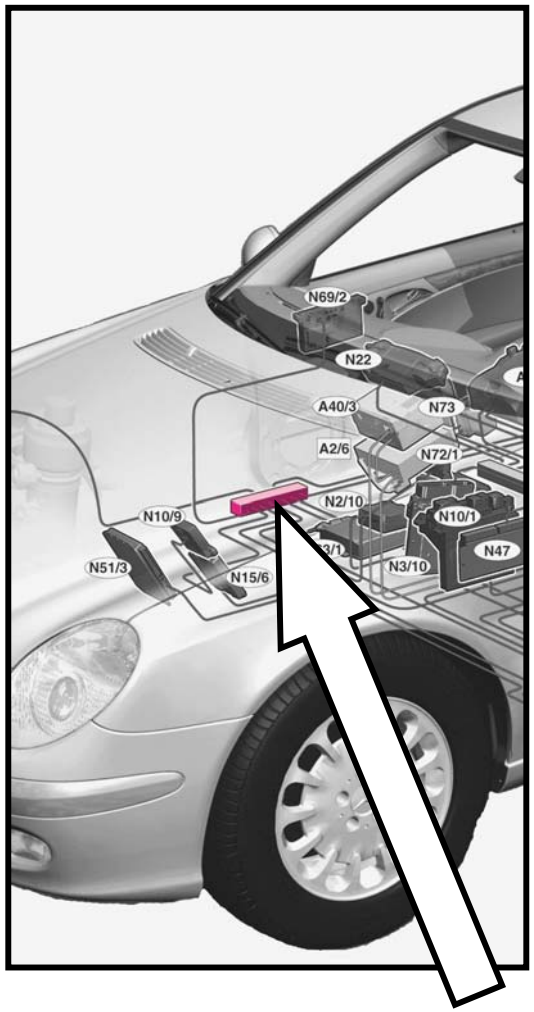

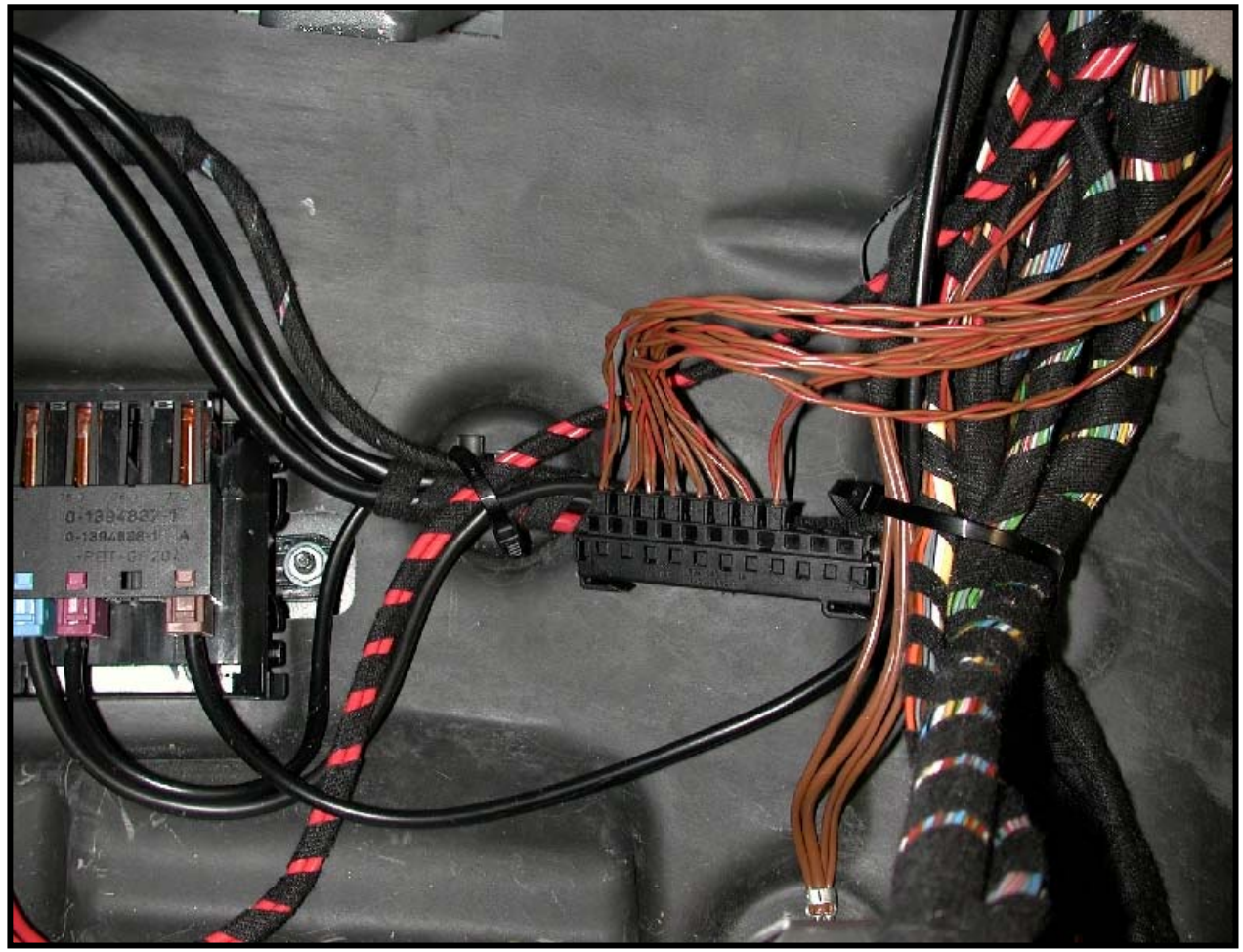

Location: Right side passenger footwell

CAN B Connector (X30/6)

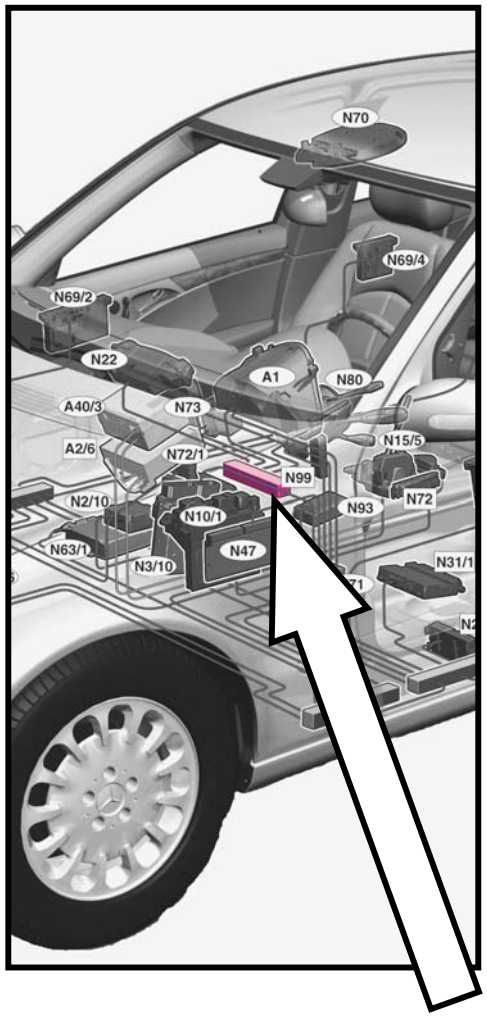

Location: Passenger side HVAC case

CAN B Connector (X30/7)

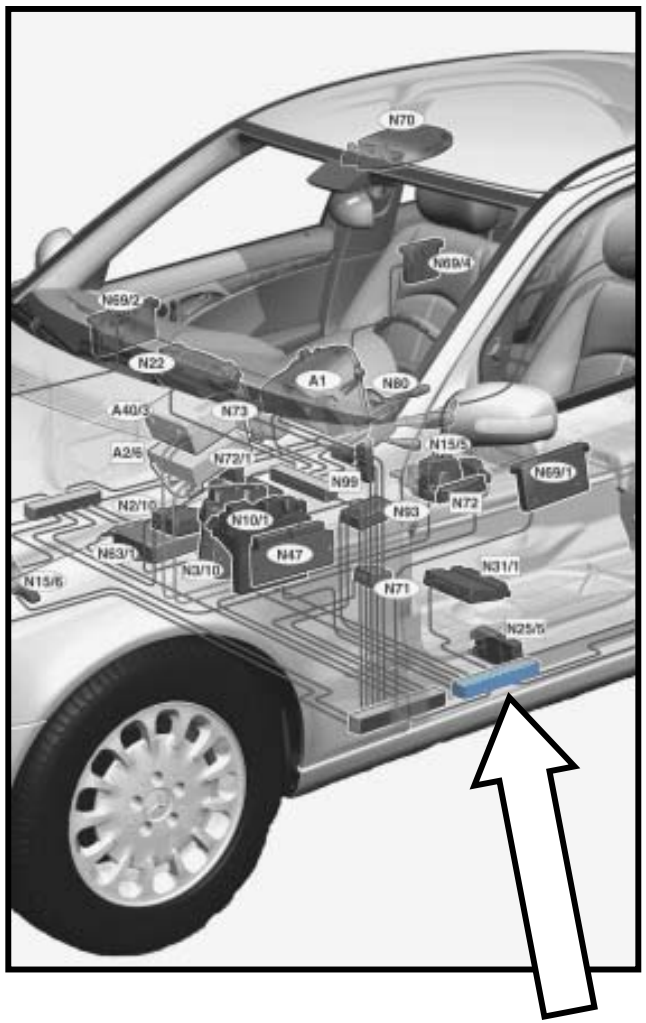

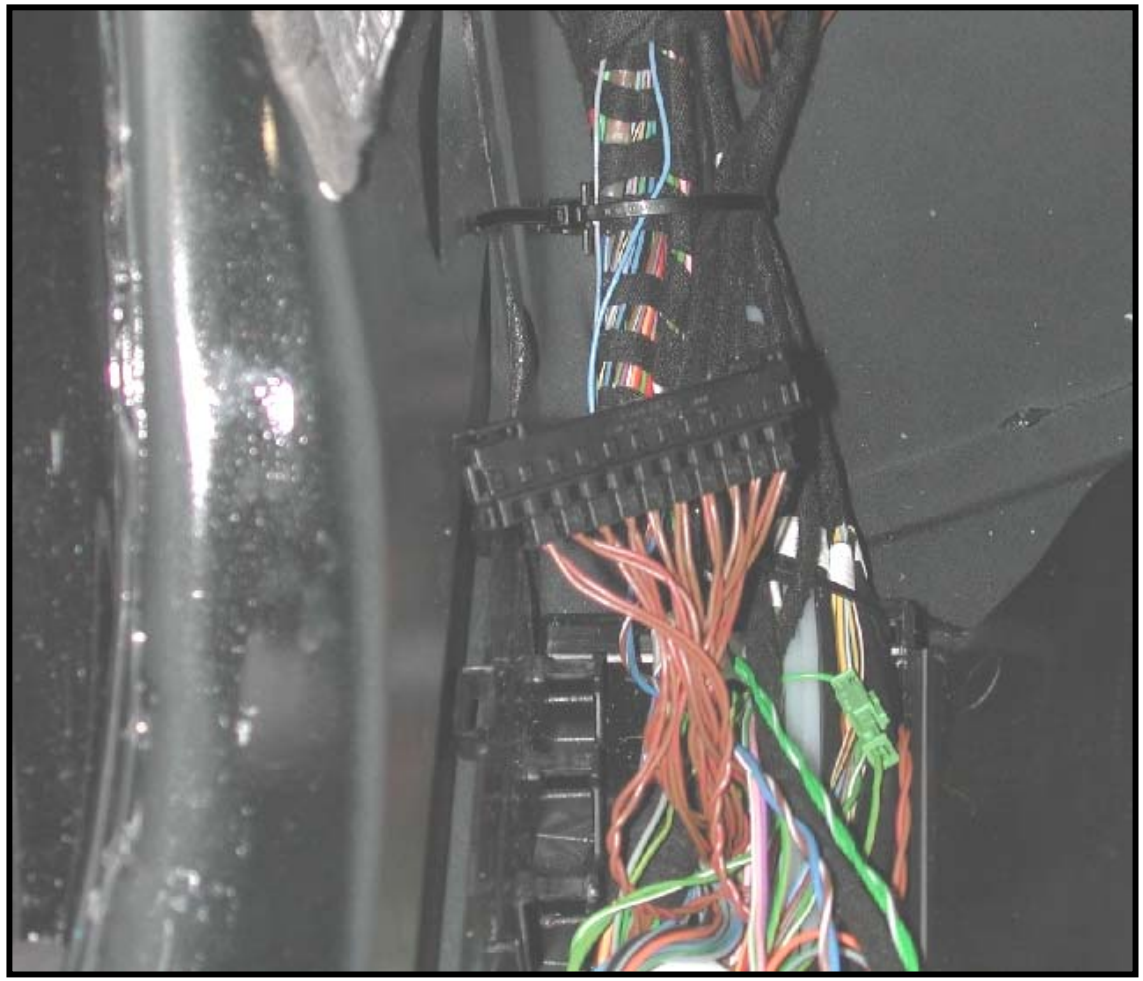

Location: Drivers rocker panel wiring trough

SAM-Rear (N10/2)

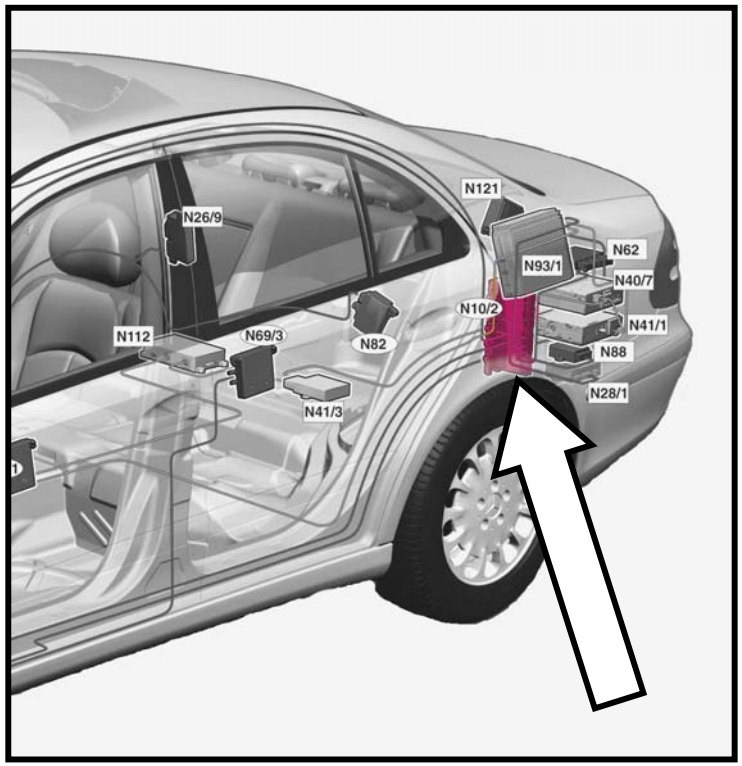

Several control modules are connected to the CAN B network via N10/2.

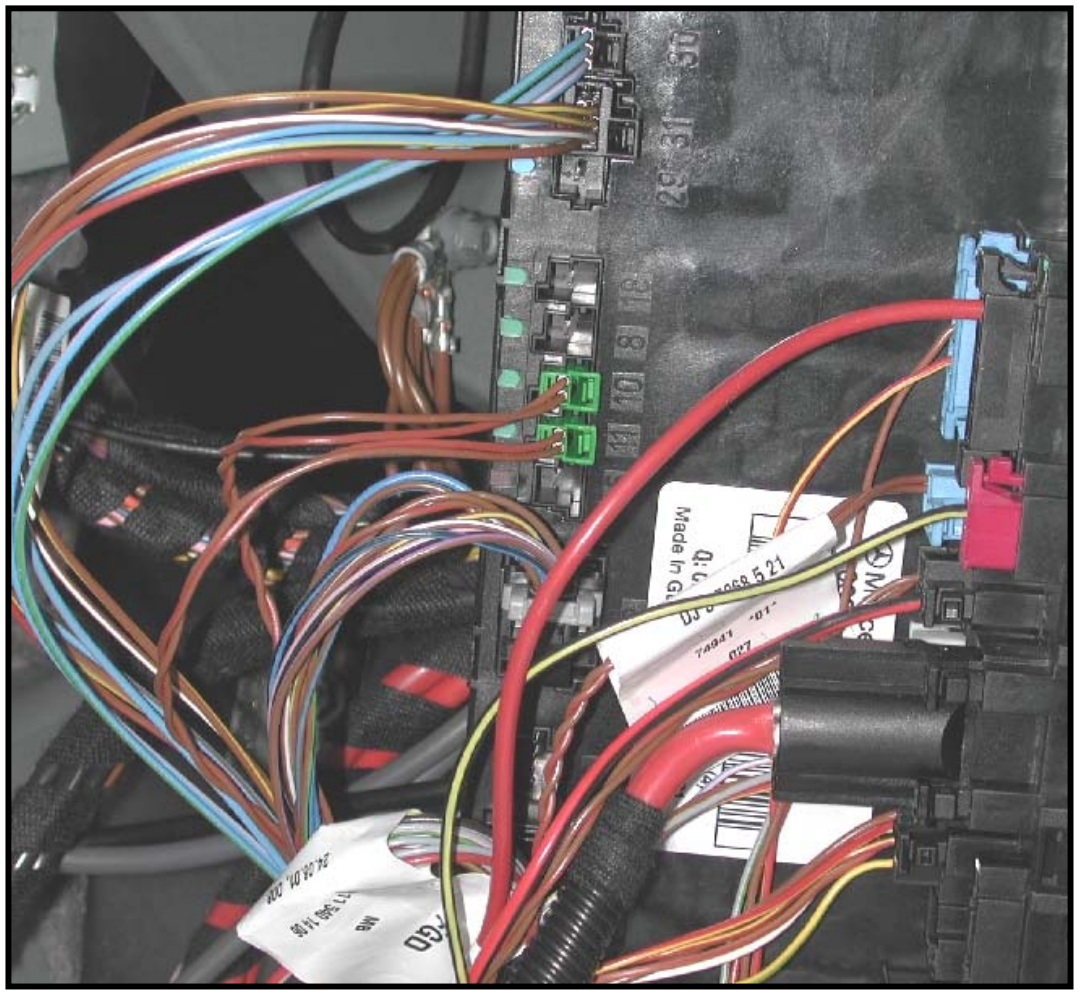

Location: Left side trunk

W211 CAN D
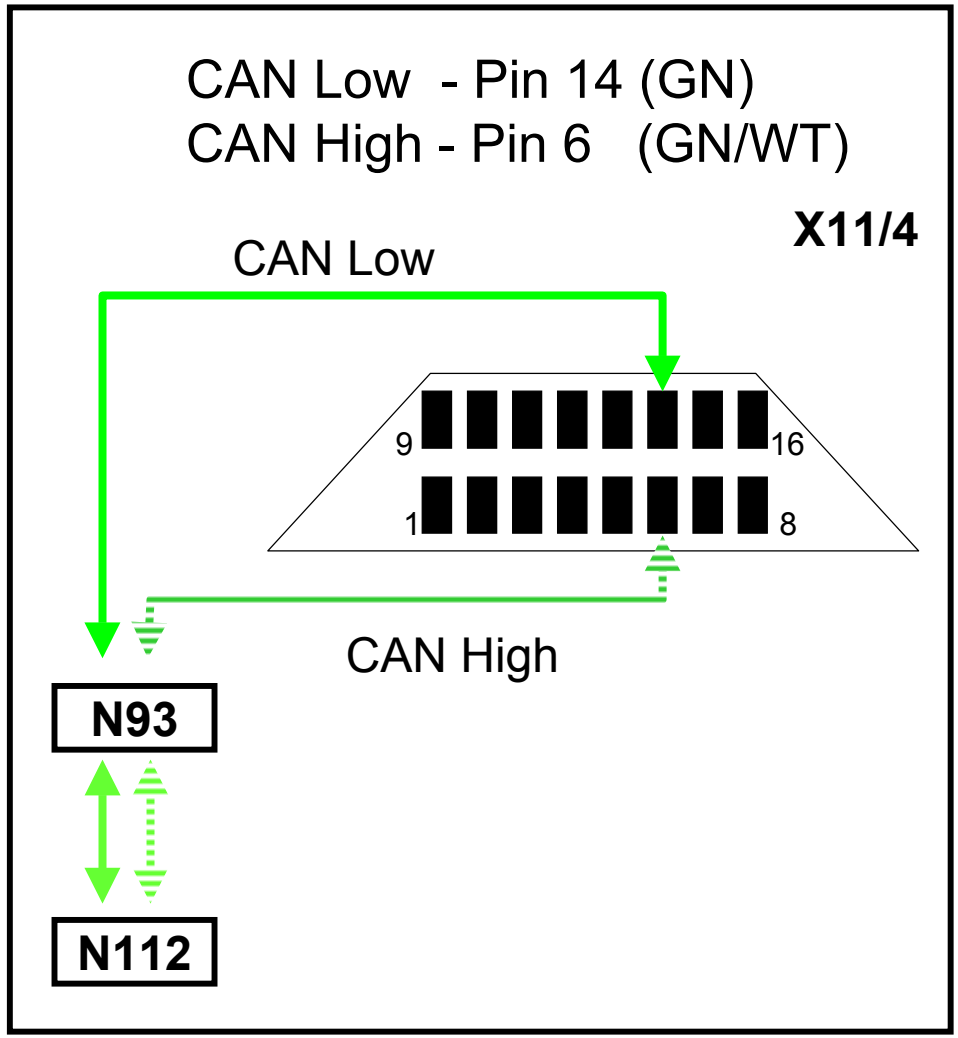
- Is the diagnostic link between Central Gateway Module (N93), Communications Platform (N112) and SDS / DAS
- CAN D voltage
  High = 2.5v
  Low = 2.5v
- CAN D voltage awake
  High = activity to 3.5v
  Low = activity to 1.5v
- All modules on CAN B are diagnosed by SDS / DAS through CAN D